ETX-Series Lithium Batteries ETX24C

DIMENSIONS

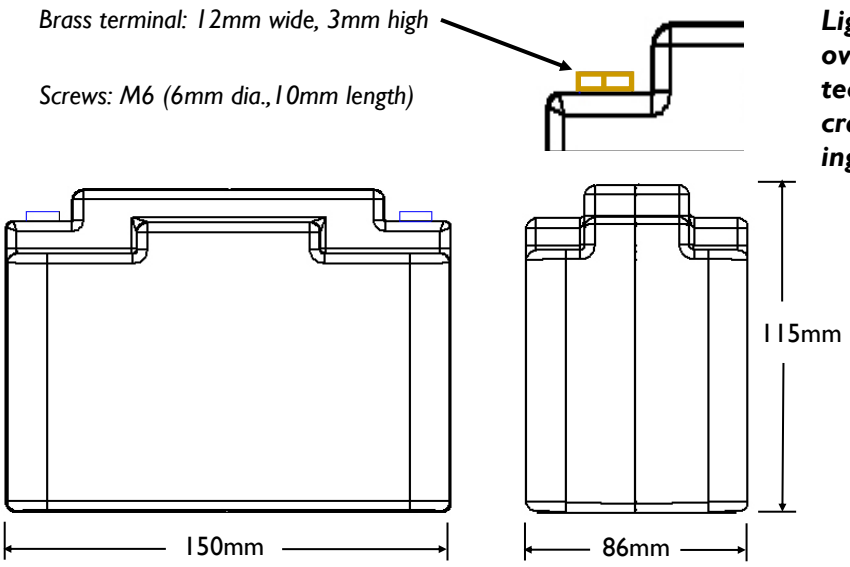

Lightweight LiFePO4 battery with exclusive over discharge protection, over charge protection, short circuit protection, excessive cranking protection and built in cell balancing technology.

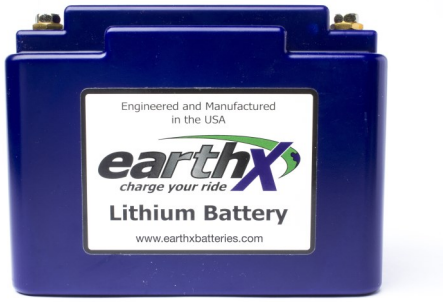

SPECIFICATIONS

Specifications

Voltage	13.2V
Capacity	7.8Ah @ 1C Rate
Capacity vs Temperature	25 °C = 100% 0°C = 92% -30°C = 80%
Self-Discharge Rate	< 3% / month @ 25 °C
Pulse Crank Amps (PCA)	420A (3 sec @ 25 °C, voltage >9V)
Cold Crank Amps (CCA)	270A (modified SAE test, 3 sec@ 0°F, volts >7.2V)
Continuous Discharge Amps	80A
Standard Charge Voltage	13.9 - 14.6 V
Maximum Charge Voltage	15V
Recommended Charge Amps	.8 - 10A
Max Charge Amps	40A (from vehicle charging system)
Life (Charge cycles, 80% depth of discharge)	4000 cycles @ 1C discharge rate, 25°C 2000 cycles @10C discharge rate, 25°C
Life (Years)	Up to 6 Years
Weight	2.6lb. (1.2 Kg)
Dimensions	5.9 min (L) x 3.4 in (W) x 4.5 in (H) 150mm(L) x 86mm (W) x 115mm (H)
Environmental Rating (resistance to water intrusion)	IP 66 (wash down with a high pressure washer)
Operating Temperature	-30 °C to +60 °C
Storage Temperature	-40 °C to +70 °C

Discharge Characteristics

Discharge Ah (25DegC)

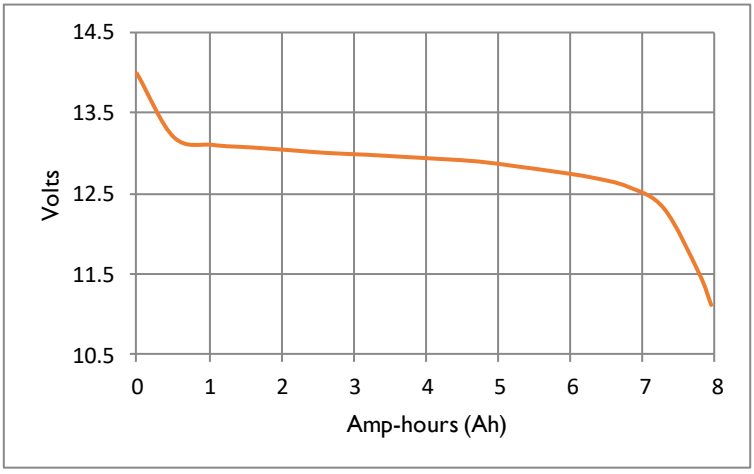

earthX charge your ride