111017_AF

EarthX Lithium Battery User's Manual

Copyright© 2025 EarthX, Inc. All rights reserved. The information contained in this document is the property of EarthX, Inc. EarthX reserves the right to make changes to its documents or products without notice. It is the responsibility of each user to ensure that all applications of EarthX's products are as intended and safe based on conditions anticipated or encountered during use. The EarthX logo is a trademark of EarthX, Inc

Table of Contents

Overview 1
Technology Inside 1
- Battery Cells 1
- ETZ-Series - BMS 2
- ETX-Series - BMS 2
- ETX-Hundred Series - BMS 3

Operating Instruction 5
- Normal Operation 5
- Abnormal Operation 5
- Monitoring 5

Limitations 7
Specifications 7
Discharge Versus Temperature 25
Self-discharge Rates 26
Discharge Curves 27
Installation 29
- Battery Installation 29
- Fault Monitoring Installation (ETX-Hundred Series) 30
- 12 Volt Battery Fault Wire Connection 30
- 24 Volt Battery Fault Wire Connection 31
- EFIS Fault Wire Connection 31
- Voltage Monitoring Alert Recommendation (Existing Aircraft Equipment if applicable) 36
- Vent Tubing Installation (Models with part # that end in VNT) 37

Battery Inspection and Testing 41
Charging 42
Storage 45
Troubleshooting 46
Warranty 46
Regulations 46
Terminology 47

ICON KEY

Valuable information

Caution

Overview

EarthX Lithium batteries are designed as a maintenance free replacement for the 12-volt lead-acid or lithium batteries. To ensure a smooth replacement process, our batteries are similar in dimensions to many OEM motorsport or power sport batteries. Our 12V replacement lithium battery consists of 4 Lithium Iron Phosphate (LiFePO4) cells in series and one or more in parallel with electronics built in to protect the lithium cells.

Our lithium cells together with our Battery Management System (BMS) create the safest lithium battery on the market, with more starting power, and longer life.

The common features of our Lithium Batteries.

- Flexible battery connection – with center mounted terminals and terminal adapters, the same batteries can be used in either left or right-side polarity applications.
- Longer Storage Life –there is no need to float charge in the off season if outside of vehicle.
- Environmentally Friendly – no hazardous chemicals and it can be recycled.
- Fast Charge – can be fully charged in less than an hour (if charged at the maximum recommended charge rate)
- Maintenance Free!
- No Special mounting direction (could even be mounted upside-down)
- Will Not Freeze or Boil Over – Lithium batteries are dry cell technology and will not freeze or boil over.

Failure to follow all application use, installation, charging, and storage instructions may result in battery damage and/or fire!

Technology Inside

Battery Cells

Our batteries use cells made of Lithium Iron Phosphate ($LiFePO_4$). This chemistry is one of the highest performing and safest on the market today.

Lithium batteries have the same charging voltage as a lead acid battery, but there are other differences. The resting voltage (voltage of the battery when not in use) is slightly higher, 13.2 volt versus 12.6 volt. A lithium battery voltage remains relatively constant while discharging, while the voltage for a lead-acid battery decreases more rapidly. A lithium battery's storage capability is nearly 100% usable (measured as Amp-Hour, Ah); while a lead-acid battery typically only has 30-60% useful storage. As such, a 12Ah lithium battery has the equivalent "useable" capacity to an 18Ah lead-acid. Also, a lithium battery's cranking power is stronger, for the voltage while cranking is generally higher. But when the lithium

battery runs out of power it does so more abruptly (see the discharge curves in the Specifications section).

$LiFePO_4$ cells by the nature of their chemistry are 3.3 volt. 12V lithium batteries are created by using 4 cells in series (technically it is a 13.2-volt battery, but nominally full charge voltage is >14V). Lead-acid batteries are made with 6 cells in series. Another difference is that lithium cells are dry cell technology, where the cells are packaged individually. As such, the individual cell's charge level will diverge with repeated charge/discharge cycles and age. This condition reduces the performance of the battery (reduces capacity), for the battery charge level is only as good as the charge level of the weakest cell. Moreover, charging a battery with unbalanced cells results in one or more cells reaching the maximum charge (voltage) level before the rest of the cells in the series, which leads to over-charging of the cell(s) and eventual failure.

ETZ-Series - BMS

All EarthX integrated BMSs continuously monitor each cell's voltage as part of the cell balancing and over-charge protection. If the voltage of a cell exceeds the others, the BMS circuits will work to reduce that cell's charge level. This ensures that the charge level of all the cells remains equal, even with the high discharge (> 100Amps) and charge current (>10Amps).

A cell can be permanently damaged if over-charged (over-voltage) just once (drained to less than 2 volts). The BMS has circuitry to block incoming current to the battery from the charging system if the voltage exceeds 16 volts (an over-charge condition). Once the voltage level is below 15 volts, the BMS will automatically reset itself. The ETX-Hundred Series batteries have enhanced over-charge protection; see the ETX-Hundred Series section below for more details.

The ETZ-Series BMS has short circuit protection, but it is not resettable or repairable.

ETX-Series - BMS

The ETX-Series BMS has all the features of the ETZ-Series, plus over-discharged protection (completely draining the battery), excessive cranking protection, and short-circuit protection.

The BMS disconnects the battery from the load if 100% of the usable energy is consumed. The usable energy is the rated Ah of the battery (new battery at 25DegC, see the Specification section within). For example, the ETX900 will provide 15.6Ah of usable energy. An analogy would be like you consuming all the usable fuel from your gas tank. Our battery uses "unusable energy" (like the unusable fuel in your fuel tank) to keep the battery healthy until you land and can recharge it. An over-discharged battery typically has an internal voltage less than 11.0V, but when the BMS disconnects, the voltage reading at the terminals of the battery will be zero volts.

Excessive cranking protection logic includes temperature monitoring to limit "high current use" (engine cranking) to 2 -35 seconds in any 60 second period (see the figure below).

If the battery terminals are "shorted" (or a low impedance load is connected across terminals), which causes the battery volts to instantaneously drop to a very low level, the battery will disconnect from the load to protect the cells and BMS from damage (short circuit protection). If the BMS disconnects due to excessive cranking protection or short circuit protection, the BMS will automatically reconnect after a cooldown period (typically 1-3 minutes). The ETX-Series is designed for short circuit protection > 1000 Amps.

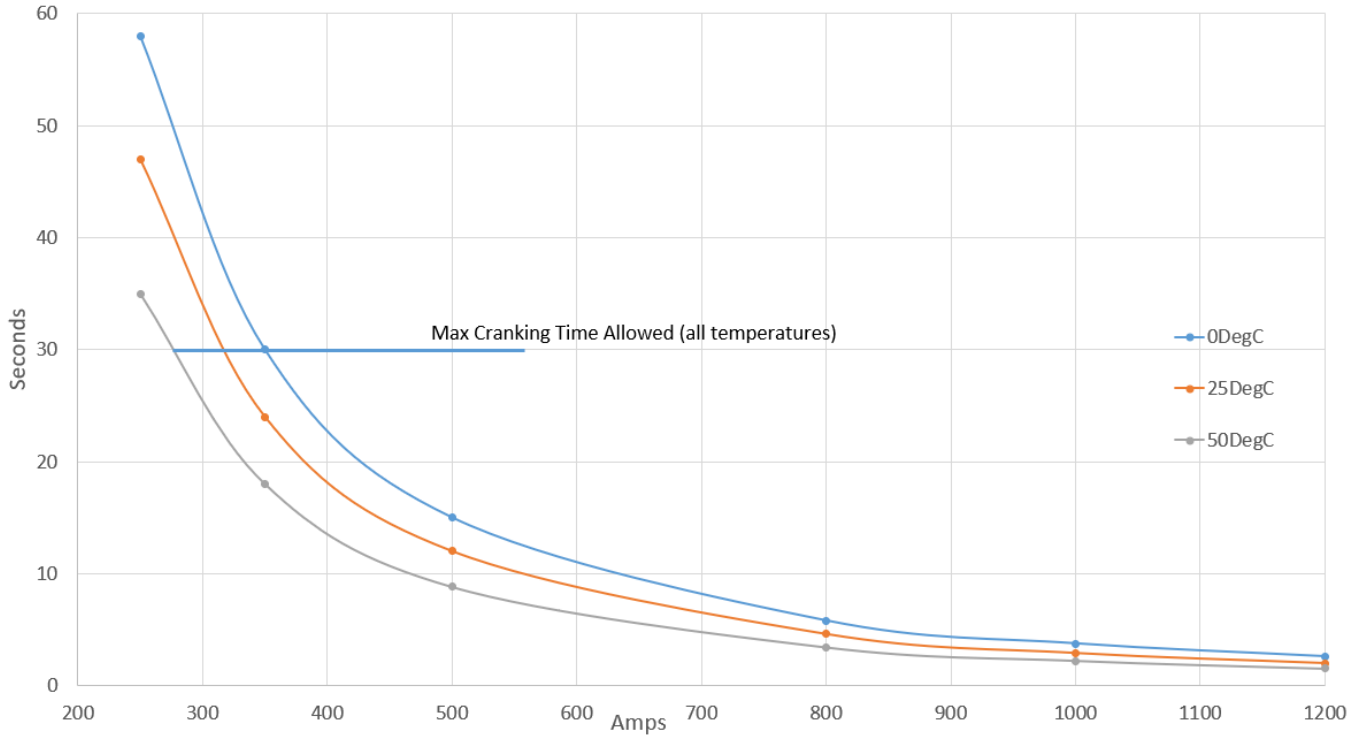

Excessive Cranking Time vs Temperature and Amps (representative curve for ETX680, ETX900, ETX1200 hundred series batteries)

ETX-Hundred Series - BMS

Only the ETX-Hundred Series battery models are recommended for use as the primary aircraft battery (starter battery). In addition to the features found in the ETZ-Series and ETX-Series, critical electronic circuits are redundant, the over-charge protection is enhanced, and fault indication is included. All components associated with the main electronic battery disconnect are redundant. The electronic disconnect uses MOSFETs, not just one or two, but four independent banks (two banks for charge and two for discharge) with multiple MOSFETs in each bank. Each bank has its own independent control circuits. The control power is redundant as well. Moreover, the control circuits are designed to be fail safe; the battery will still charge and discharge (current flow to/from the battery) when the controls fail. The built-in redundancy and fail-safe design ensure that no single point failure results in the battery unintentionally disconnecting. See the block diagram below. The design aligns with the requirements for an FAA approved lithium battery as per RTCA performance

specifications DO-311a, DO-254, and DO-160. Only vented batteries (model number ends in -VNT) include a thermal run-away containment system making it fully compliant with the DO-311a specification.

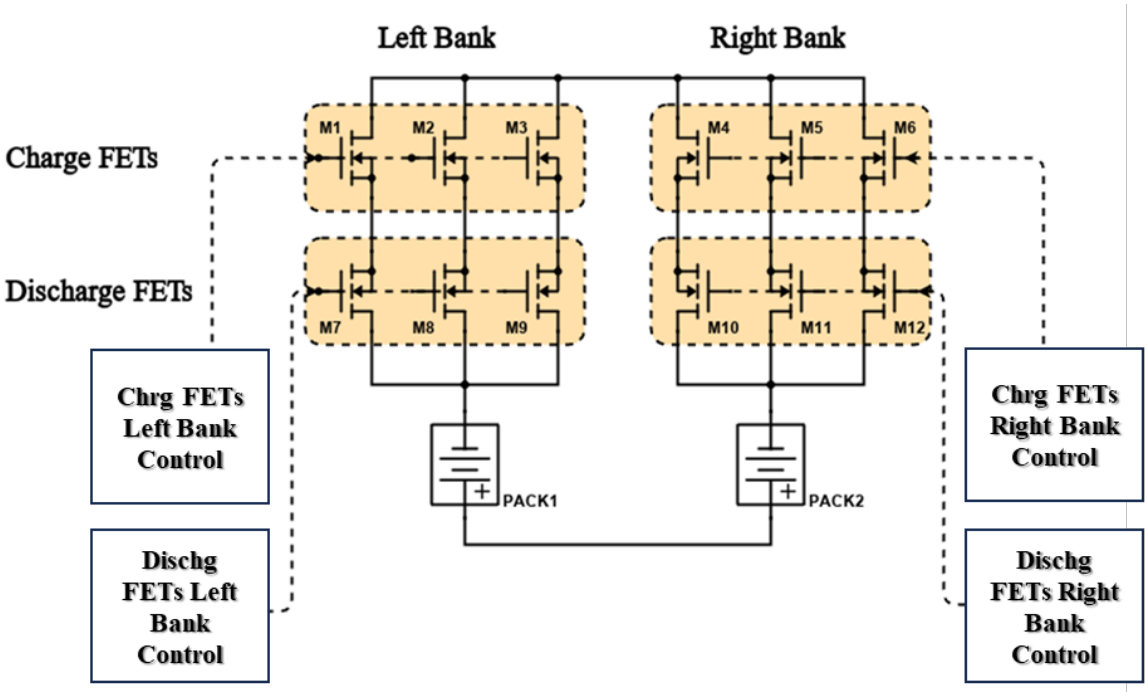

BMS Block Diagram of Redundancy

Aircraft electrical system over-voltage protection is provided by an independent over-voltage protection device typically built into the alternator regulator. In the event of an alternator regulator failure where the voltage increases to above 16 volts, your regulators over voltage protection device is the first line of protection for it should operate in < 100ms. The regulator over-voltage protection device shuts down the alternator by removing the field (pops the field breaker). If the alternator doesn't shut down, the EarthX BMS's over-voltage protection will block incoming charge current after a 3 second delay above 16 volts. The time delay is to allow the aircraft alternator over voltage protection to activate first. The discharge current (current out of battery) is unaffected in this situation. The circuit is like a diode, blocking flow in one direction (charge current into the battery), while allowing current to flow from the battery (discharge current). Once the alternator is shutdown or fails and the voltage returns to < 15 volts, the BMS's over-voltage protection automatically resets (allowing charge current).

EarthX requires the aircraft to have an automatic over-voltage protection (crowbar) device for alternator type charging systems. The only exception is low current output (<20 amp), pad mount standby alternators.

The battery's microcontroller monitors all failure modes, and reports failures with a built-in LED indicator and discrete output. The discrete output for external fault monitoring is a

single wire connection with a ¼" quick connect terminal. The output is a "current sinking" type circuit (see diagram below) that can handle 100mA (connects the discrete output to battery ground if a fault is present). This output can be connected to an external 12V LED or general-purpose discrete input of an EFIS. The fault output has three states: fast flashing (2 second on/ 2 second off), slow flashing (5 second on/ 5 second off) or solid.

Operating Instruction

Normal Operation

Under normal operating conditions the battery performs as any lead acid battery, storing energy from the charging system and supplying it when the charging system is off.

Abnormal Operation

Under abnormal conditions that exceed the operating limits of the battery the battery may stop supplying power. Two such important examples are over-discharge and over-temperature. The over discharge protection shuts off outgoing power when the battery is 95% discharged (supplied 95% of its available energy). The over-temperature protection shuts off outgoing power when cells and electronics get too hot as the result of excessive cranking (i.e. cranking the engine for more than 15 seconds within a 1-minute period, the ETX1200-24-VNT is designed for 40 seconds).

Monitoring

The slow flashing fault can indicate an improper state of charge or a problem with the cells internal to the battery. If the battery voltage is outside the normal range of operation, 12.8V to 14.6V, the battery is over-discharged or over-charged, most likely the result of an issue with the electrical/charging system. If the battery voltage is within the normal operating range, with a slow flashing fault, it is indicating an abnormal condition with a cell, such as one cell's state of charge is very different compared to the other cells (high cell charge level imbalance). The slow flashing fault may come on briefly during or following periods of high current charging and is not a concern. But if the fault persists, comes on consistently during changing, or remains (charging or not), the battery will need to be replaced.

The solid fault indicates a BMS hardware failure. For example, if the microcontroller fails the fault indication output is activated (on solid). If the fault persists, comes on and stays on, the battery will need to be replaced.

The fast-flashing fault is an indication of high temperature; temperature exceeding the normal operating or storage limits of the battery.

The table below shows the most common fault conditions and possible causes. **Note: the same table applies to the 24volt batteries, just double the voltage specified.**

LED Light	Voltage	Possible Cause	Recommended Action
Slow Flashing (5s on/5s off)	Less than 12.8V	Battery over-discharged (due to faulty charging system)	Charge battery. Once charged, the light will stop flashing.
Slow Flashing (5s on/5s off) (> 1 hour time period)	13.2V-14.6V	Weak or failing cell	Discontinue use. If in flight, this is not an immediate issue unless it is in conjunction with a charging system failure.
Slow Flashing (5s on/5s off) (< 30 min. time period)	13.2V -14.6V	Cell to cell charge levels are not balanced	May come on briefly during periods of high current charging until the cells are automatically balanced. Try charging with a plugin charger, like an Optimate Lithium charger.
Slow Flashing (5s on/5s off)	Greater than 15.2V	Over-charging (due to faulty charging system)	If in flight, shut off the charging system immediately. Aircraft over-voltage protection is required if alternator charging system is greater than 20 amps (i.e. over voltage crowbar circuit)
Solid Light	Any voltage	BMS electronic issue	Discontinue use. If in flight, this is not an immediate issue unless it is in conjunction with a charging system failure.
Solid Light that turns off after 3 minutes	Any voltage	Short Circuit protection was activated	None.
Short Flashing (2s on/2s off)	Any voltage	High battery temperature (> 85°C / 185°F)	Let the battery cool down prior to cranking or charging. If in flight, this is not an immediate issue, but if it continues on subsequent flights, investigate and mitigate high temperature at battery location.

A sustained fault can indicate a serious issue with the battery or vehicle charging system that requires immediate attention. Discontinue use until the issue is resolved and the battery no longer indicates

a fault. Continued use of a faulty battery can result in a cell rupture, the release of flammable vapors, smoke and or a fire.

Limitations

Below are the installation specific limitations / requirements:

- The maximum charge rating shown in the specification section (model specific) must be adhered to.
- Automatic over-voltage protection is required on aircraft alternators with a maximum RPM greater than 4500.
- Only modern vehicle charging systems like 3-phase alternators or permanent magnet alternators are recommended as the charging source for this battery.
- For ETX-Hundred Series batteries, the battery fault monitoring circuit must be installed and tested (see fault monitoring installation section of this manual).

The battery must be installed in such a manner or location to limit radiant and convection heating. The maximum short term **environmental** temperature of battery location should be less than 85°C. The battery should not be placed near high temperature surfaces without the use of heat shields.

Specifications

Model: ETZ5G

Voltage	13.2 V
Ah (lead-acid equivalent)	10
Ah (1 hour discharge rate)	3.4 (1C rate)
Pulse Crank Amps (PCA)	240A (3 sec @ 20 °C, voltage >7.2V)
Cold Crank Amps (CCA)	140A (modified SAE test, 3 sec@ 0°F, voltage >7.2V)
Self-Discharge Rate	< 5%/month @ 25°C
Max Continuous Discharge Amps	30A
Standard Charge Voltage	13.9 - 14.6 V
Recommended Charger/Maintainer Amps	.8 - 5A
Max Charge Amps	15A (from vehicle charging system)
Life (Charge cycles)	4000 cycles @ 1C discharge rate, 25°C (20% depth of discharge) 2000 cycles @10C discharge rate, 25°C (80% depth of discharge)
Life (Years)	Up to 6 Years
Weight	1.17 lb. (.53Kg)
Dimensions	3.54in x 1.96in x 3.54in (90mmX50mmX90mm)

Environmental Rating (resistance to water intrusion)	IP 66 (wash down with a high-pressure washer)
Operating Temperature	-30 °C to +60 °C
Storage Temperature	-40 °C to +70 °C

Model: ETZ14C

Voltage	13.2 V
Ah (lead-acid equivalent)	20
Ah (1 hour discharge rate)	6.8 (1C rate)
Pulse Crank Amps (PCA)	690A (3 sec @ 20 °C, voltage >7.2V)
Cold Crank Amps (CCA)	330A (modified SAE test, 3 sec@ 0°F, voltage >7.2V)
Self-Discharge Rate	< 3%/month @ 25°C
Max Continuous Discharge Amps	60A
Standard Charge Voltage	13.9 - 14.6 V
Recommended Charger/Maintainer Amps	.8 - 10A
Max Charge Amps	30A (from vehicle charging system)
Life (Charge cycles)	4000 cycles @ 1C discharge rate, 25°C (20% depth of discharge) 2000 cycles @10C discharge rate, 25°C (80% depth of discharge)
Life (Years)	Up to 6 Years
Weight	2.5 lb. (1.1Kg)
Dimensions	5.9in x 3.4in x 4.5in (150mmX86mmX115mm)
Environmental Rating (resistance to water intrusion)	IP 66 (wash down with a high-pressure washer)
Operating Temperature	-30 °C to +60 °C
Storage Temperature	-40 °C to +70 °C

Model: ETX12A

Voltage	13.2 V
Ah (Lead-acid equivalent)	12
Ah (1 hour discharge rate)	4 (1C rate)
Pulse Crank Amps (PCA)	220A (3 sec @ 20 °C, voltage >7.2V)
Cold Crank Amps (CCA)	135A (modified SAE test, 3 sec@ 0°F, voltage >7.2V)
Self-Discharge Rate	< 5%/month @ 25°C
Max Continuous Discharge Amps	40A
Standard Charge Voltage	13.9 - 14.6 V
Recommended Charger/Maintainer Amps	.8 - 5A
Max Charge Amps	20A (from vehicle charging system)

Life (Charge cycles)	4000 cycles @ 1C discharge rate, 25°C (20% depth of discharge) 2000 cycles @10C discharge rate, 25°C (80% depth of discharge)
Life (Years)	Up to 6 Years
Weight	1.3 lb. (.6Kg)
Dimensions	**ETX12A** 4.5in x 2.6in x 3.7in (113mmX66mmX95mm)
Environmental Rating (resistance to water intrusion)	IP 66 (wash down with a high-pressure washer)
Operating Temperature	-30 °C to +60 °C
Storage Temperature	-40 °C to +70 °C

Model: ETX18B, ETX18C, ETX18F (ETX18C discontinued as of 2-2019, use ETX18F as replacement)

Voltage	13.2 V
Ah (Lead-acid equivalent)	18
Ah (1 hour discharge rate)	6.2 (1C rate)
Pulse Crank Amps (PCA)	340A (3 sec @ 20 °C, voltage >7.2V)
Cold Crank Amps (CCA)	230A (modified SAE test, 3 sec@ 0°F, voltage >7.2V)
Self-Discharge Rate	< 3%/month @ 25°C
Max Continuous Discharge Amps	60A
Standard Charge Voltage	13.9 - 14.6 V
Recommended Charger/Maintainer Amps	.8 - 8A
Max Charge Amps	30A (from vehicle charging system)
Life (Charge cycles)	4000 cycles @ 1C discharge rate, 25°C (20% depth of discharge) 2000 cycles @10C discharge rate, 25°C (80% depth of discharge)
Life (Years)	Up to 6 Years
Weight	2.2 lb.(1Kg)
Dimensions	**ETX18B** 5.3in x 2.6in x 4.1in (135mmX66mmX105mm) **ETX18C** 5.9in x 3.4in x 4.5in (150mmX86mmX115mm) **ETX18F** 5.9in x 3.4in x 3.6in (150mmX86mmX93mm)
Environmental Rating (resistance to water intrusion)	IP 66 (wash down with a high-pressure washer)
Operating Temperature	-30 °C to +60 °C

Storage Temperature	-40 °C to +70 °C

Model: ETX24C

Voltage	13.2 V
Ah (Lead-acid equivalent)	24
Ah (1 hour discharge rate)	7.8 (1C rate)
Pulse Crank Amps (PCA)	420A (3 sec @ 20 °C, voltage >7.2V)
Cold Crank Amps (CCA)	270A (modified SAE test, 3 sec@ 0°F, voltage >7.2V)
Self-Discharge Rate	< 4%/month @ 25°C
Max Continuous Discharge Amps	80A
Standard Charge Voltage	13.9 - 14.6 V
Recommended Charger/Maintainer Amps	.8 - 10A
Max Charge Amps	40A (from vehicle charging system)
Life (Charge cycles)	4000 cycles @ 1C discharge rate, 25°C (20% depth of discharge) 2000 cycles @10C discharge rate, 25°C (80% depth of discharge)
Life (Years)	Up to 6 Years
Weight	2.6 lb. (1.2Kg)
Dimensions	**ETX24C** 5.9in x 3.4in x 4.5in (150mmX86mmX115mm)
Environmental Rating (resistance to water intrusion)	IP 66 (wash down with a high-pressure washer)
Operating Temperature	-30 °C to +60 °C
Storage Temperature	-40 °C to +70 °C

Model: ETX36C, D &E (ETX36E discontinued as of 2-2019, use ETX680 as replacement)

Voltage	13.2 V
Ah (Lead-acid equivalent)	36
Ah (1 hour discharge rate)	12.4 (1C rate)
Pulse Crank Amps (PCA)	680A (3 sec @ 20 °C, voltage >7.2V)
Cold Crank Amps (CCA)	320A (modified SAE test, 3 sec@ 0°F, voltage >7.2V)
Self-Discharge Rate	< 3%/month @ 25°C
Max Continuous Discharge Amps	100A
Standard Charge Voltage	13.9 - 14.6 V
Recommended Charger/Maintainer Amps	.8 - 15A
Max Charge Amps	60A (from vehicle charging system)

Life (Charge cycles)	4000 cycles @ 1C discharge rate, 25°C (20% depth of discharge) 2000 cycles @10C discharge rate, 25°C (80% depth of discharge)
Life (Years)	Up to 6 Years
Weight	3.9 lb. (1.8Kg)
Dimensions	**ETX36C** 5.9in x 3.4in x 4.5in (150mmX86mmX115mm) **ETX36D** 6.9in x 3.4in x 6.1in (175mm X86mm X155mm) **ETX36E** 6.5in x 3.1in x 6.6in (166mm X79mm X168mm)
Environmental Rating (resistance to water intrusion)	IP 66 (wash down with a high-pressure washer)
Operating Temperature	-30 °C to +60 °C
Storage Temperature	-40 °C to +70 °C

Model: ETX48E (discontinued as of 3-1-2017-use ETX1200 as replacement)

Voltage	13.2 V
Ah (Lead-acid equivalent)	48
Ah (1 hour discharge rate)	24.8 (1C rate)
Pulse Crank Amps (PCA)	1200A (3 sec @ 20 °C, voltage >7.2V)
Cold Crank Amps (CCA)	600A (modified SAE test, 3 sec@ 0°F, voltage >7.2V)
Max Continuous Discharge Amps	150A
Standard Charge Voltage	13.9 - 14.6 V
Recommended Charger/Maintainer Amps	5 - 30A
Max Charge Amps	150A (from vehicle charging system)
Life (Charge cycles)	4000 cycles @ 1C discharge rate, 25°C (20% depth of discharge) 2000 cycles @10C discharge rate, 25°C (80% depth of discharge)
Life (Years)	Up to 6 Years
Weight	7.7 lb. (3.5Kg)
Dimensions	6.6in x 3.4in x 6.9in (166mm X86mm X175mm)
Environmental Rating (resistance to water intrusion)	IP 66 (wash down with a high-pressure washer)
Operating Temperature	-30 °C to +60 °C
Storage Temperature	-40 °C to +70 °C

Model: ETX104 (back up power only battery, not a starter battery)

Voltage	13.2 V
Capacity	4Ah @ 1C rate
Capacity vs Temperature	25 °C = 100% 0°C = 97% -30°C = 95%
Self-Discharge Rate	< 5%/month @ 25°C
Max Continuous Discharge Amps	8A
Standard Charge Voltage	13.9 - 14.6 V
Recommended Charger/Maintainer Amps	.8 - 5A
Max Charge Amps	15A (Internally limited to 15A by battery electronics)
Life (Charge cycles)	4000 cycles @ 1C discharge rate, 25°C (20% depth of discharge) 2000 cycles @10C discharge rate, 25°C (80% depth of discharge)
Life (Years)	Up to 6 Years
Weight	1.3 lb. (.6Kg)
Dimensions	4.5in x 2.6in x 3.7in (113mmX66mmX95mm)
Environmental Rating (resistance to water intrusion)	IP 66 (wash down with a high-pressure washer)
Operating Temperature	-30 °C to +60 °C
Storage Temperature	-40 °C to +70 °C
Maximum Altitude	50,000 Ft

Model: ETX680/ETX680C

Voltage	13.2 V
Capacity	12.4Ah @ 1C rate (See below)
Capacity vs Temperature	25 °C = 100% 0°C = 97% -30°C = 95%
Self-Discharge Rate	<3%/month @ 25°C
Pulse Crank Amps (PCA)	680A (3 sec @ 20 °C, voltage >7.2V)
Cold Crank Amps (CCA)	320A (modified SAE test, 3 sec@ 0°F, voltage >7.2V)
Max Continuous Discharge Amps	100A
Standard Charge Voltage	13.9 - 14.6 V
Recommended Charger/Maintainer Amps	5 - 15A
Max Charge Amps	60A (from vehicle charging system)

Life (Charge cycles)	4000 cycles @ 1C discharge rate, 25°C (20% depth of discharge) 2000 cycles @10C discharge rate, 25°C (80% depth of discharge)
Life (Years)	Up to 6 Years
Weight	4.1 lb. (1.9Kg)/3.9 lb. (1.8Kg)
Dimensions	**ETX680** 6.5in (L) x 3in (W) x 6.6in (H) 166mm(L)x76mm(W)x168mm(H) **ETX680C** 5.9in (L) x 3.4in (W) x 4.5in (H) 150mm(L)x86mm(W)x115mm(H)
Environmental Rating (resistance to water intrusion)	IP 66 (wash down with a high-pressure washer)
Operating Temperature	-30 °C to +60 °C
Storage Temperature	-40 °C to +70 °C
Maximum Altitude	50,000 Ft

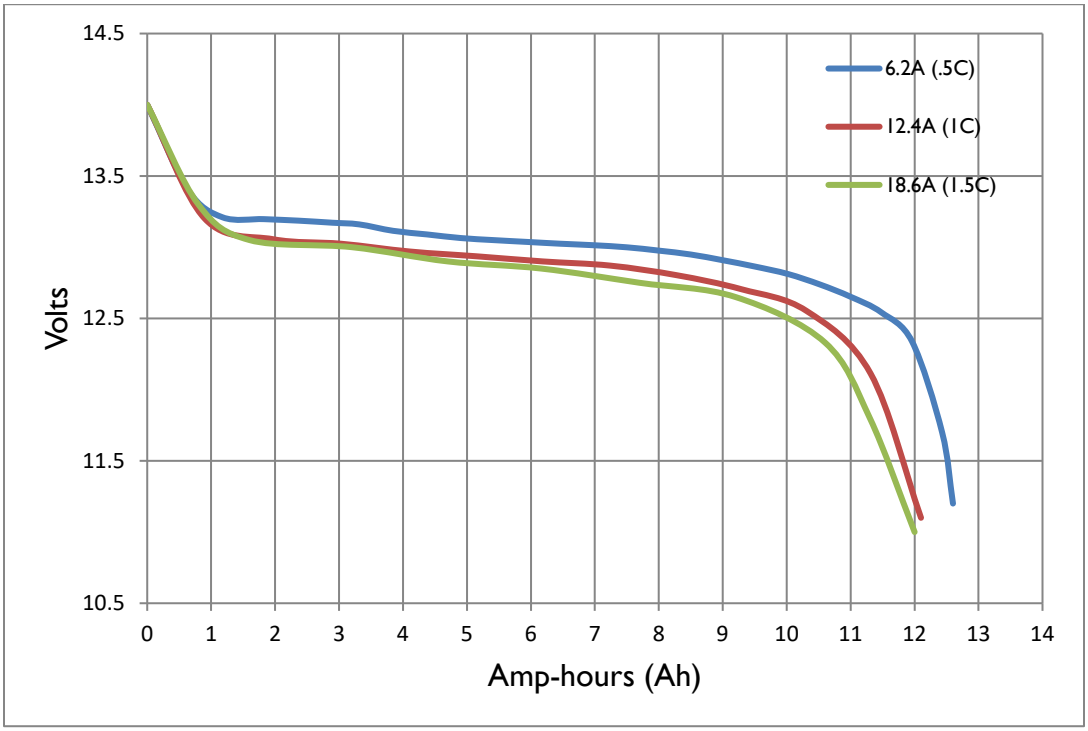

ETX680/680C Discharge Capacity

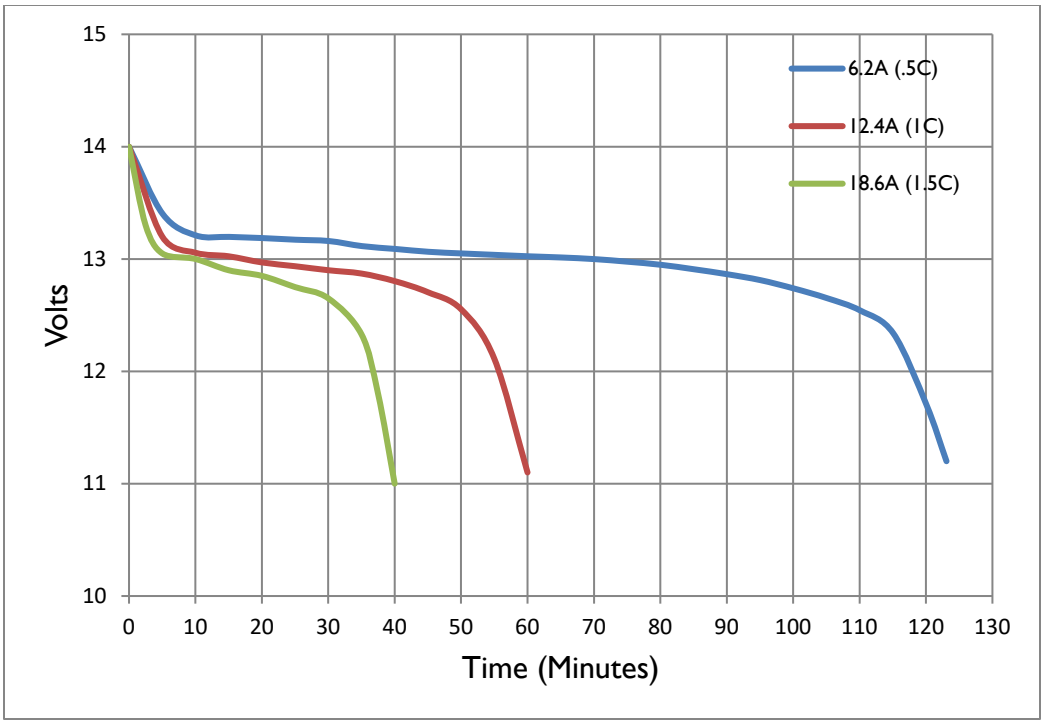

ETX680/680C Discharge Time

Model: ETX900 / ETX900-VNT

Voltage	13.2 V
Capacity	15.6Ah @ 1C rate (See below)
Capacity vs Temperature	25 °C = 100% 0°C = 97% -30°C = 95%
Self-Discharge Rate	<3%/month @ 25°C
Pulse Crank Amps (PCA)	840A (3 sec @ 20 °C, voltage >7.2V)
Cold Crank Amps (CCA)	400A (modified SAE test, 3 sec@ 0°F, voltage >7.2V)
Max Continuous Discharge Amps	150A
Standard Charge Voltage	13.9 - 14.6 V
Recommended Charger/Maintainer Amps	5 - 20A
Max Charge Amps	80A (from vehicle charging system)
Life (Charge cycles)	4000 cycles @ 1C discharge rate, 25°C (20% depth of discharge) 2000 cycles @10C discharge rate, 25°C (80% depth of discharge)
Life (Years)	Up to 6 Years

Weight (ETX900) / (ETX900-VNT)	4.9 lb. (2.2Kg) / (VNT model is 5.4lb)
Dimensions	6.5in (L) x 3in (W) x 6.6in (H) 166mm(L)x76mm(W)x168mm(H)
Environmental Rating (resistance to water intrusion)	IP 66 (wash down with a high-pressure washer)
Operating Temperature	-30 °C to +60 °C
Storage Temperature	-40 °C to +70 °C
Maximum Altitude	50,000 Ft

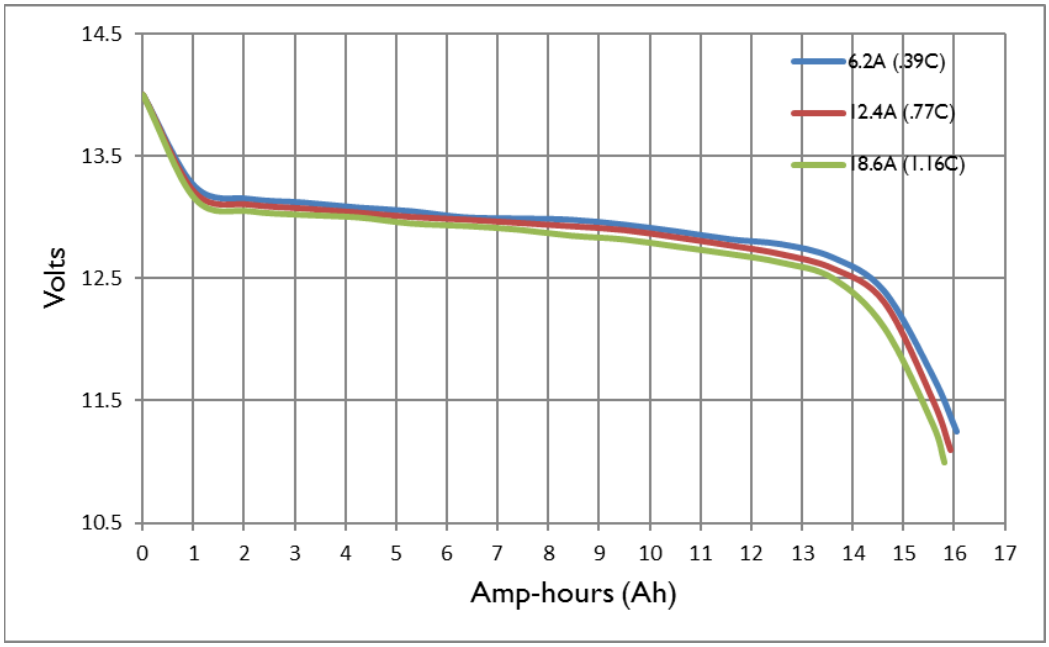

ETX900 Discharge Capacity

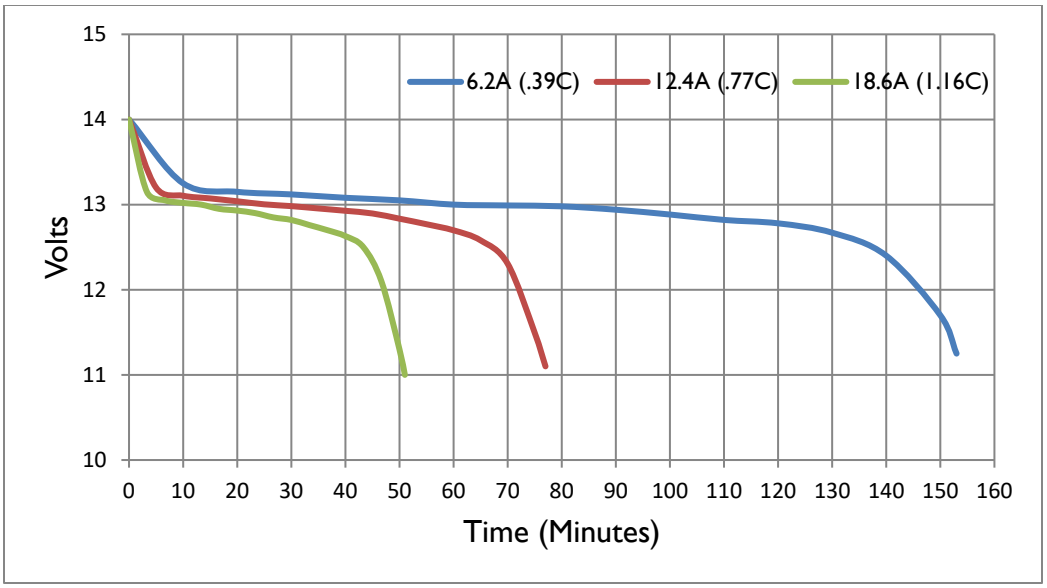

ETX900 Discharge Time

Model: ETX1200 (January 2023 or older models)

Voltage	13.2 V
Nominal Voltage	12.8 V
Capacity	24.8Ah @ 1C rate (See below)
Capacity vs Temperature	25 °C = 100% 0°C = 97% -30°C = 95%
Self-Discharge Rate	<2%/month @ 25°C
Pulse Crank Amps (PCA)	1200A (3 sec @ 20 °C, voltage >7.2V)
Cold Crank Amps (CCA)	600A (modified SAE test, 3 sec@ 0°F, voltage >7.2V)
Max Continuous Discharge Amps	150A
Standard Charge Voltage	13.9 - 14.6 V
Recommended Charger/Maintainer Amps	5 - 30A
Max Charge Amps	120A (from vehicle charging system)
Life (Charge cycles)	4000 cycles @ 1C discharge rate, 25°C (20% depth of discharge) 2000 cycles @10C discharge rate, 25°C (80% depth of discharge)
Life (Years)	Up to 6 Years
Weight	6.9 lb. (3.15Kg)
Dimensions	6.5in (L) x 3.1in (W) x 6.6in (H) 166mm(L)x79mm(W)x168mm(H)
Environmental Rating (resistance to water intrusion)	IP 66 (wash down with a high-pressure washer)
Operating Temperature	-30 °C to +60 °C

Storage Temperature	-40 °C to +70 °C
Maximum Altitude	50,000 Ft

Model: ETX1200 (Effective February 2023)

Voltage	13.2 V
Nominal Voltage	12.8 V
Capacity	20Ah @ 1C rate (See below)
Capacity vs Temperature	25 °C = 100% 0°C = 97% -30°C = 95%
Self-Discharge Rate	<2%/month @ 25°C
Pulse Crank Amps (PCA)	1200A (3 sec @ 20 °C, voltage >7.2V)
Cold Crank Amps (CCA)	600A (modified SAE test, 3 sec@ 0°F, voltage >7.2V)
Max Continuous Discharge Amps	150A
Standard Charge Voltage	13.9 - 14.6 V
Recommended Charger/Maintainer Amps	5 - 30A
Max Charge Amps	120A (from vehicle charging system)
Life (Charge cycles)	4000 cycles @ 1C discharge rate, 25°C (20% depth of discharge) 2000 cycles @10C discharge rate, 25°C (80% depth of discharge)
Life (Years)	Up to 6 Years
Weight	5.6 lb. (2.7Kg)
Dimensions	6.5in (L) x 3in (W) x 6.6in (H) 166mm(L)x76mm(W)x168mm(H)
Environmental Rating (resistance to water intrusion)	IP 66 (wash down with a high-pressure washer)
Operating Temperature	-30 °C to +60 °C
Storage Temperature	-40 °C to +70 °C
Maximum Altitude	50,000 Ft

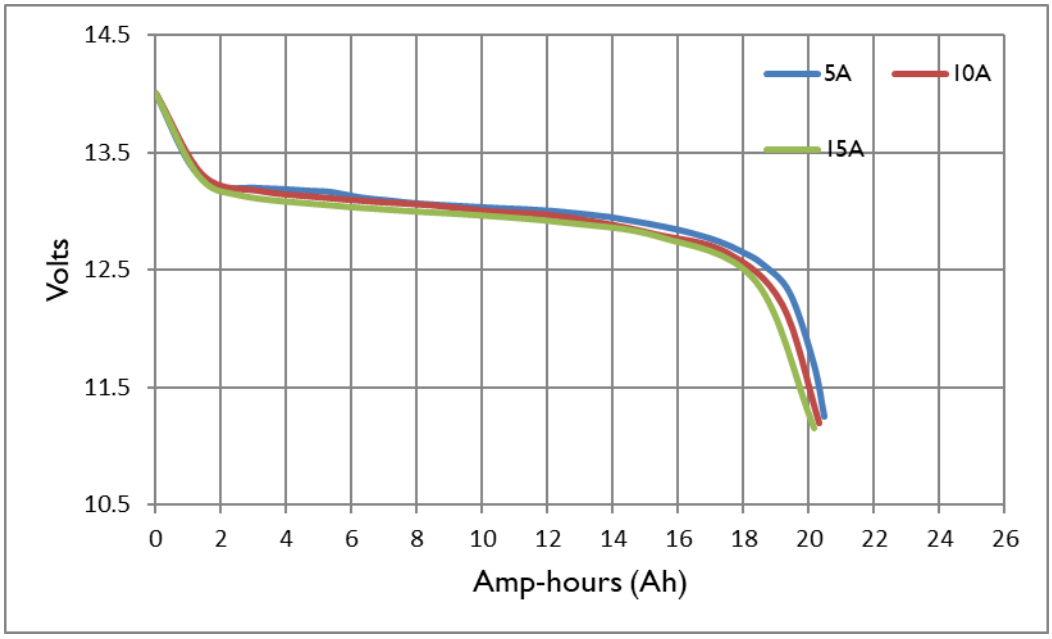

ETX1200 Discharge Capacity

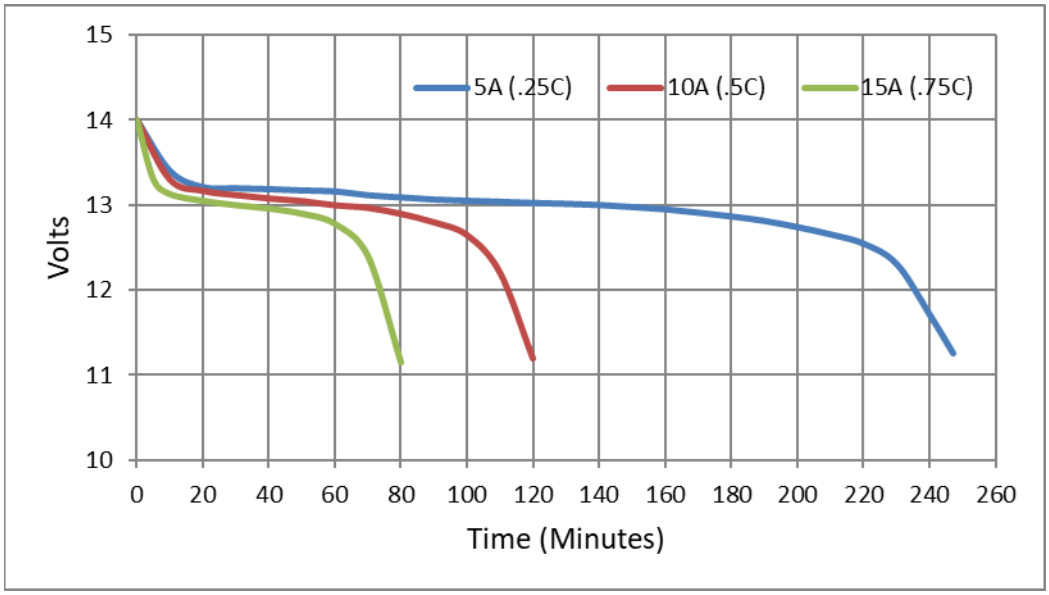

ETX1200 Discharge Time

Model: ETX1600

Voltage	13.2 V
Nominal Voltage	12.8 V
Capacity	32Ah @ 1C rate
Capacity vs Temperature	25 °C = 100%

	0°C = 97% -30°C = 95%
Self-Discharge Rate	<2%/month @ 25°C
Pulse Crank Amps (PCA)	1600A (3 sec @ 20 °C, voltage >7.2V)
Cold Crank Amps (CCA)	760A (modified SAE test, 3 sec@ 0°F, voltage >7.2V)
Max Continuous Discharge Amps	200A
Standard Charge Voltage	13.9 - 14.6 V
Recommended Charger/Maintainer Amps	5 - 30A
Max Charge Amps	160A (from vehicle charging system)
Life (Charge cycles)	4000 cycles @ 1C discharge rate, 25°C (20% depth of discharge) 2000 cycles @10C discharge rate, 25°C (80% depth of discharge)
Life (Years)	Up to 6 Years
Weight	8.9 lb. (4Kg)
Dimensions	6.5 in (L) x 5.1 in (W) x 6.6 in (H) 166mm(L) x 129mm (W) x 168mm (H)
Environmental Rating (resistance to water intrusion)	IP 66 (wash down with a high-pressure washer)
Operating Temperature	-30 °C to +60 °C
Storage Temperature	-40 °C to +70 °C
Maximum Altitude	50,000 Ft

Model: ETX900-24

Voltage	26.4 V
Capacity	15.6Ah (See charts)
Capacity vs Temperature	25 °C = 100% 0°C = 97% -30°C = 95%
Self-Discharge Rate	< 4% / month @ 25 °C
Pulse Crank Amps (PCA)	840A (3 sec @ 20 °C)
Cold Crank Amps (CCA)	400A (3 sec @ 0 °F)
Continuous Discharge Amps	150A
Standard Charge Voltage	27.6 – 28.8V
Maximum Charge Voltage	29.2V
Recommended Charger/Maintainer Amps	5 - 20A
Max Charge Amps	80A (@28.8V from charging system); 150A

	(@28V from charging system)
Life (Charge cycles, 80% depth of discharge)	4000 cycles @ 1C discharge rate, 25°C 2000 cycles @10C discharge rate, 25°C
Life (Years)	Up to 6 Years
Weight	8.9lb. (4.0Kg)
Dimensions	6.5 in (L) x 5.1 in (W) x 6.6 in (H) 166mm(L) x 129mm (W) x 168mm (H)
Environmental Rating (resistance to water intrusion)	IP 66 (wash down with a high-pressure washer)
Operating Temperature	-30 °C to +60 °C
Storage Temperature	-40 °C to +70 °C
Maximum Altitude	50,000 Ft

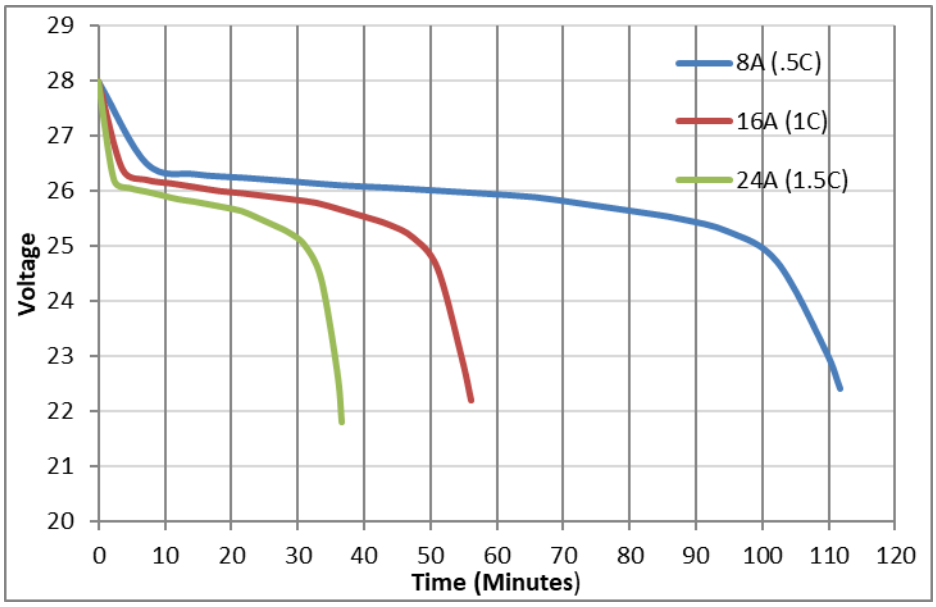

ETX900-24 Discharge Time

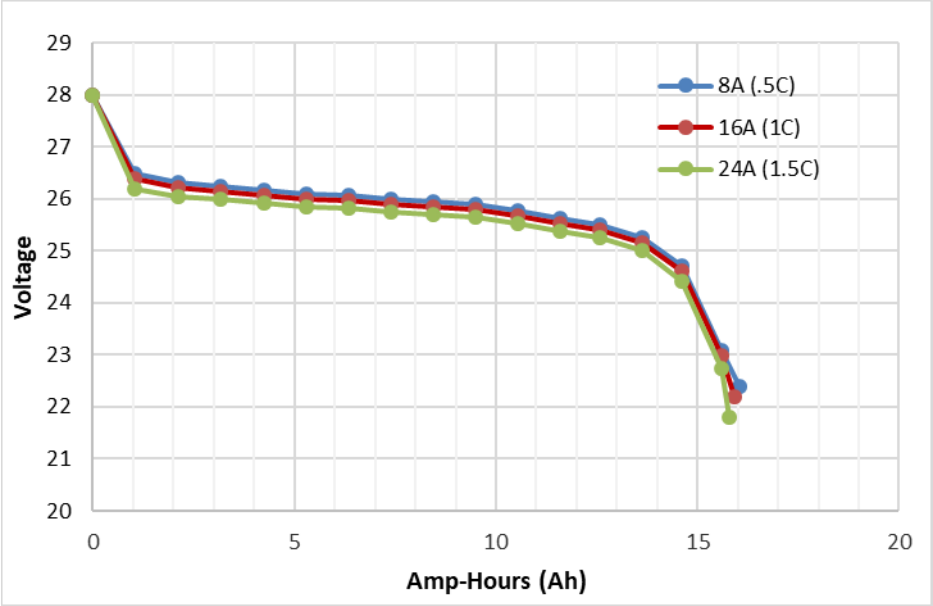

ETX900-24 Discharge Capacity

Model: ETX680-24-VNT

Voltage	26.4 V
Capacity	11.7Ah (See charts)
Capacity vs Temperature	25 °C = 100% 0°C = 97% -30°C = 95%
Self-Discharge Rate	< 5% / month @ 25 °C
Pulse Crank Amps (PCA)	850A (3 sec @ 20 °C)
Cold Crank Amps (CCA)	400A (3 sec @ 0 °F)
Continuous Discharge Amps	150A
Standard Charge Voltage	27.6 – 28.8V
Maximum Charge Voltage	29.2V
Recommended Charger/Maintainer Amps	5 - 15A
Max Charge Amps	70A (@28.8V from charging system); 150A (@27.8V from charging system)
Life (Charge cycles, 80% depth of discharge)	4000 cycles @ 1C discharge rate, 25°C 2000 cycles @10C discharge rate, 25°C
Life (Years)	Up to 6 Years
Weight	7.2lb. (3.27Kg)

Dimensions	6.5 in (L) x 5.1 in (W) x 6.6 in (H) 166mm(L) x 129mm (W) x 168mm (H)
Environmental Rating (resistance to water intrusion)	IP 66 (wash down with a high-pressure washer)
Operating Temperature	-30 °C to +60 °C
Storage Temperature	-40 °C to +70 °C
Maximum Altitude	50,000 Ft

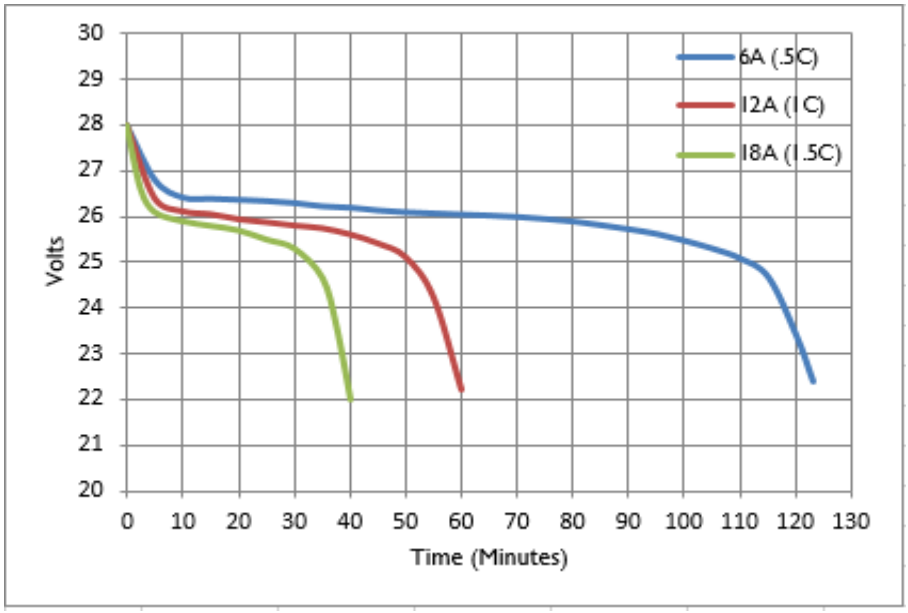

ETX680-24-VNT Discharge Time

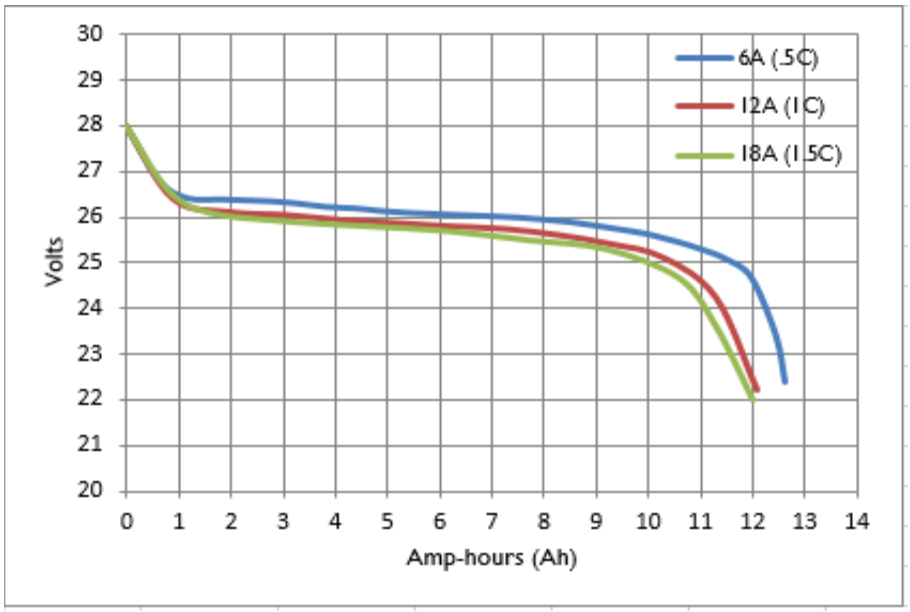

ETX680-24-VNT Discharge Capacity

Model: ETX1200-24-VNT

Voltage	26.4 V
Capacity (1C, 1hour rate at 23 °C)	19.4Ah @ 1C rate (See below)
Capacity vs Temperature	25 °C = 100% 0°C = 97% -30°C = 95% (19.4Ah at this temperature)
Self-Discharge Rate	<2%/month @ 25°C
Peak Power (Ipp), 23/-18 °C	1200 / 650 amps
Rated Power (Ipr), 23/-18 °C	800 / 400 amps
Max Continuous Discharge Amps (Discharging 100% of capacity)	40A
Standard Charge Voltage	27.6 – 28.8 V
Recommended Charger/Maintainer Amps	5 - 20A
Max Charge Amps	300A (from aircraft charging system)
Weight	12.4lb (5.6Kg)
Dimensions	7.3in (L) x 6.4in (W) x 6.6in (H) 185mm(L)x162mm(W)x168mm(H)
Environmental Rating (resistance to water intrusion)	IP 66 (wash down with a high-pressure washer)
Operating Temperature	-30 °C to +60 °C (+65 °C for 30minutes)
Storage Temp	-40 °C to +70 °C

Short Term Ground Survival Temp	85 °C (30 minutes)
Maximum Altitude	50,000 Ft
Shelf Life	1 year (without charging)

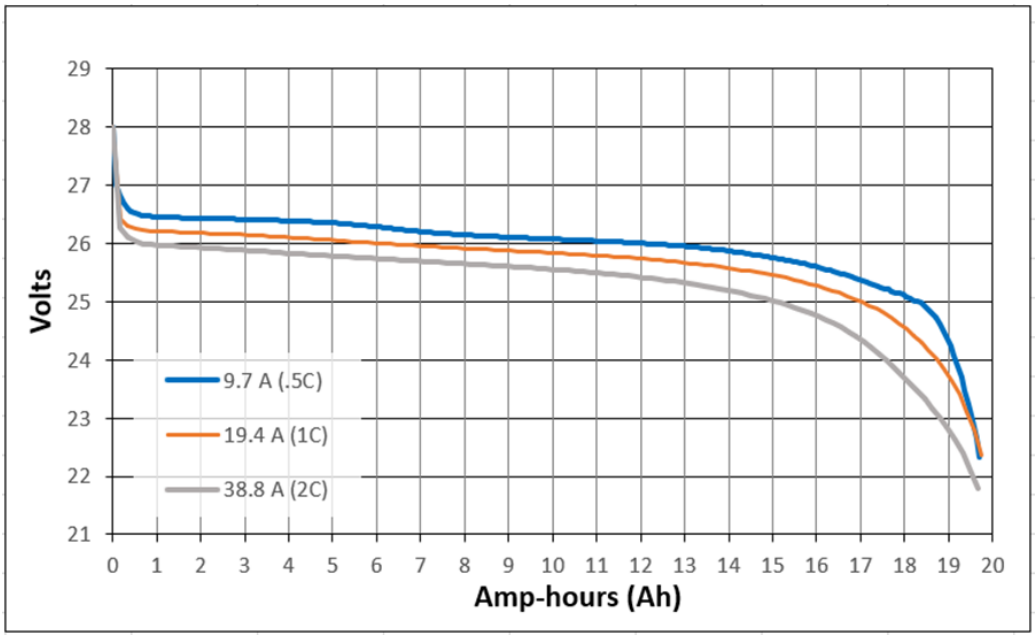

ETX1200-24-VNT Discharge Capacity

Model: ETX400-24-VNT

Voltage	26.4 V
Capacity (1C, 1hour rate at 23°C)	7.8Ah @ 1C rate (See below)
Capacity vs Temperature	25 °C = 100% 0°C = 97% -30°C = 95% (7.8Ah at this temperature)
Self-Discharge Rate	<5%/month @ 25°C
Peak Power (Ipp), 23/-18 °C	400 / 290 amps
Rated Power (Ipr), 23/-18 °C	240 / 170 amps
Max Continuous Discharge Amps (Discharging 100% of capacity)	40A
Standard Charge Voltage	27.6 – 28.8 V
Recommended Charger/Maintainer Amps	.8 - 10A
Max Charge Amps	40A (from aircraft charging system)
Life (Not life limited)	Up to 6 Years
Weight	5.4lb (2.45Kg)
Dimensions	6.5in (L) x 3.0in (W) x 6.6in (H) 166mm(L)x77mm(W)x168mm(H)
Environmental Rating (resistance to water intrusion)	IP 66 (wash down with a high-pressure washer)

Operating Temperature (short term)	-30 °C to +60 °C (+65 °C for 30minutes)
Storage Temp	-40 °C to +70 °C
Short Term Ground Survival Temp	-45 to 85 °C (30 minutes)
Maximum Altitude	50,000 Ft
Shelf Life	1 year (without charging)

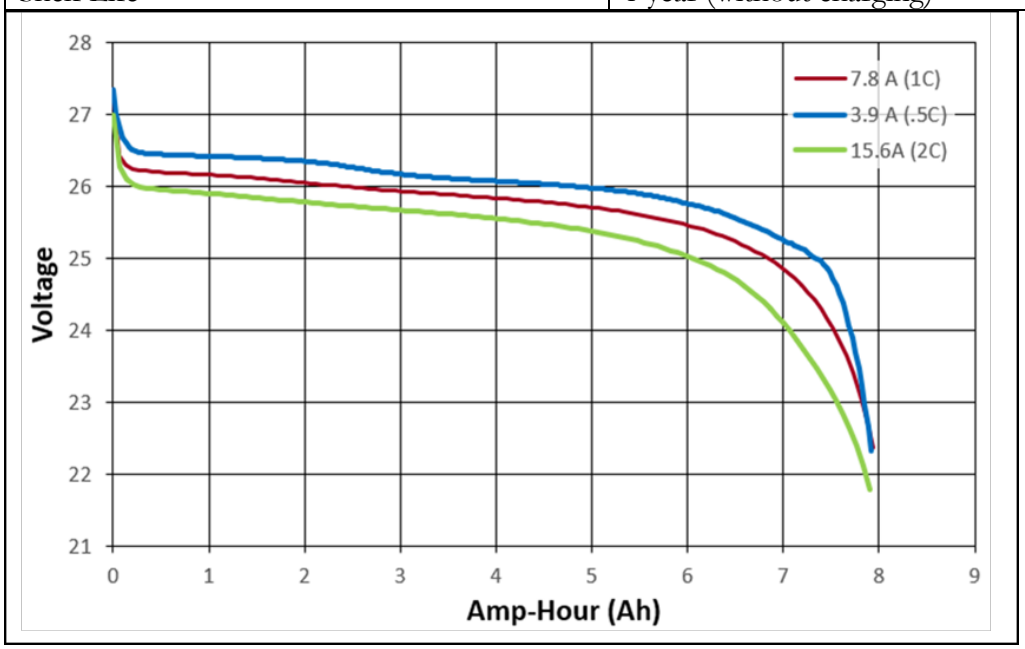

ETX400-24-VNT Discharge Capacity

Discharge Versus Temperature

We use a similar Cold Cranking Amp test standard as the lead acid battery manufacturers (SAE test performed at 0°F, but 3 second discharge time vs 30 second). As such, our battery with a similar CCA rating as a lead acid battery should provide the same cranking performance at 0°F. But below -17°C (0°F) an equivalent lead acid battery will outperform a lithium battery (see the graph below).

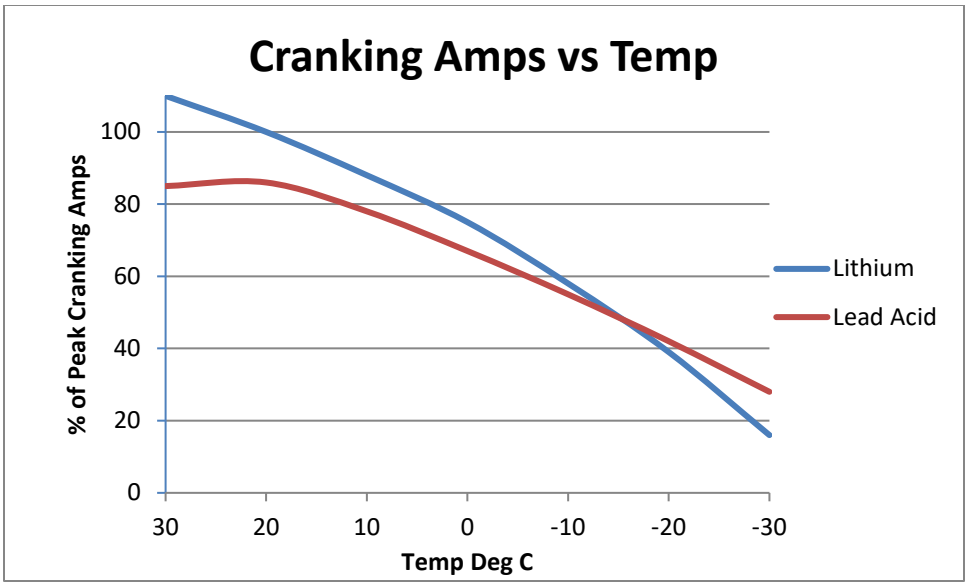

Self-discharge Rates

The self-discharge rate is dependent on temperature. At high temperatures (>25°C), the cell internal resistance decreases so the self-discharge rate increases. See the graph below for self-discharge rates (in % per month) versus temperature.

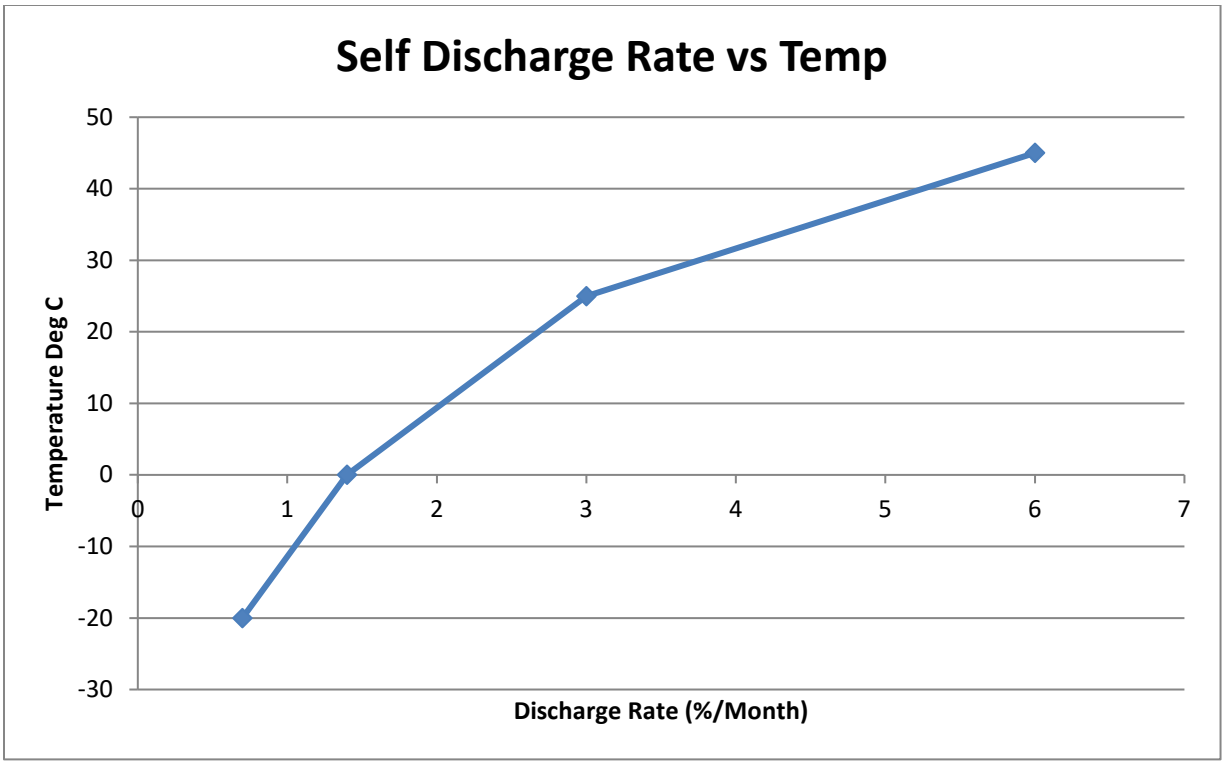

Discharge Curves

Voltage is not a good indication of the state-of-charge in lithium batteries. The first graph below shows the state-of-charge versus voltage at a 1C discharge rate for the ETX12 (representative of the ETX-Series batteries). Typically, lithium batteries require advanced methods like current counting to track the charge level. As seen from the graph, the voltage only varies .4V for nearly 80% of the discharge cycle at 25 deg C. 13.4V is a good indication of full charge, while 12.8V is an indication of full discharge at 25 deg C.

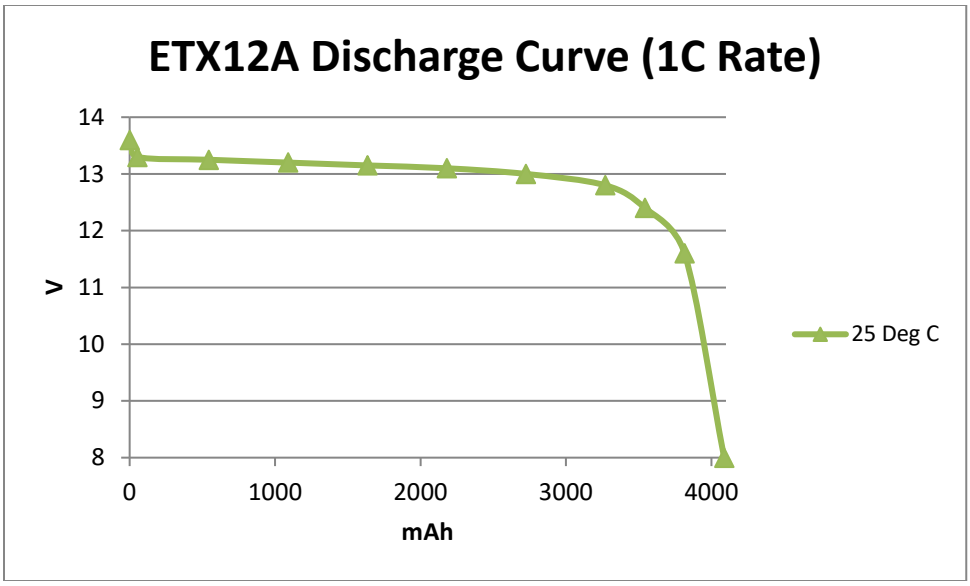

The graph below illustrates that usable Ah is nearly the same regardless of the discharge rate, with the voltage remaining above 11.5V for most of the discharge cycle.

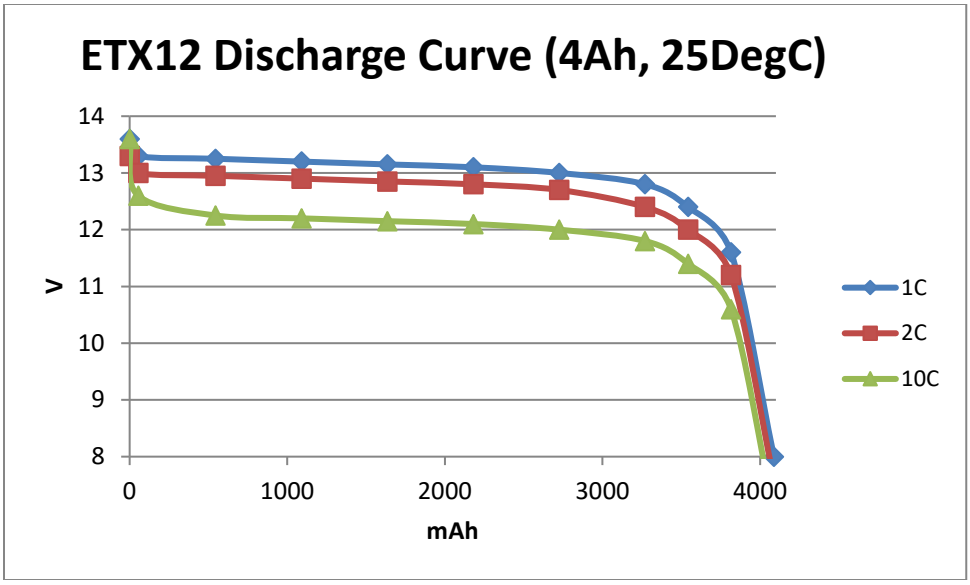

Like lead acid batteries, lithium batteries' discharge performance is lower as the temperature decreases, meaning the voltages and the Ah are lower. The graph below shows the ETX12 discharge curves at a 1C rate over a wide operating temperature range. Note: there can be as much as a 15% decrease in Ah and discharge voltage at -30deg C as compared to 25 deg C. All the EarthX ETX-Series batteries exhibit similar discharge curve profiles.

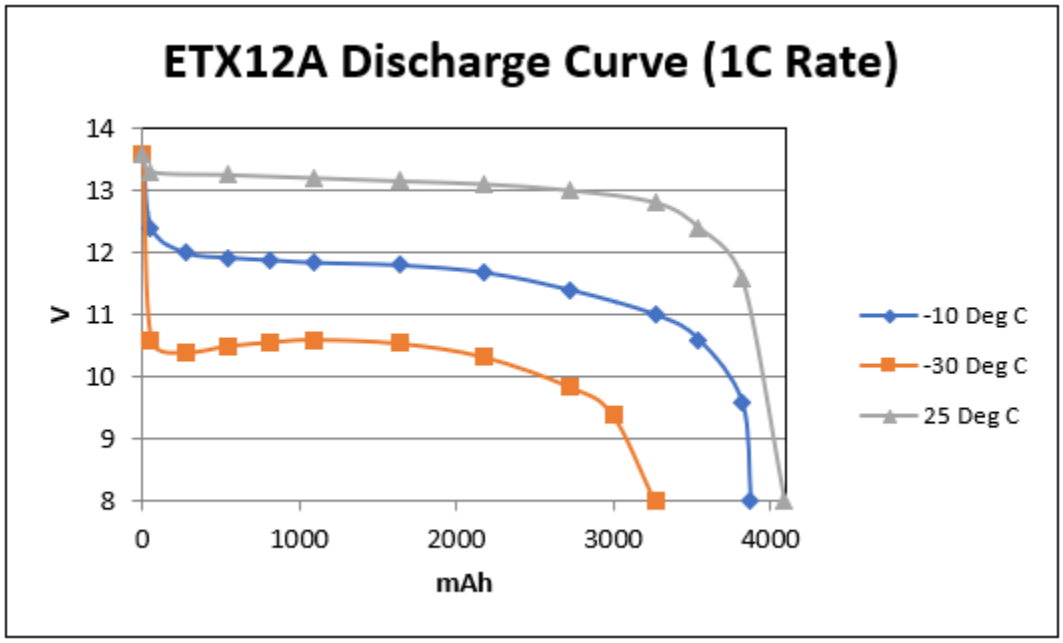

Installation

Battery Installation

Lithium Iron Phosphate batteries are very robust, but if mishandled or misused they can rupture and they can burn. Please review the WARNING section for details. Never disassemble the battery or disable the built-in Battery Management System (BMS). Never expose the battery to fire or temperatures above 200° F or 100° C. Never short-circuit the positive and negative terminals of the battery. If you must jump start your battery, do it only with a like sized battery. For example, if you have a dirt bike battery that is 4 amps, you can jump start it with another dirt bike battery of similar amps (4-8amps) etc. You do not want to jumpstart any battery, lead acid or lithium, from 2 batteries of unlike size as this can lead to cell rupture, explosion of a lead acid battery, and or fire. It is recommended you check the voltage before installing. If the voltage is below 13.2V (26.4V for 24V replacement batteries), charge the battery before installing. Remove all metal objects from your person before handling the battery and use insulated tools for installation. Follow these steps to install your new ETX-Series Lithium battery properly and safely.

1. Remove the old battery, while paying attention to the routing and placement of wires, cables and protective covers.

2. Check the battery cables and connectors for corrosion or damage. Pay special attention to the positive battery cable (red cable), check for cuts or wear marks in the insulation. Clean and/or replace the battery cables as required.

3. (Skip this step if you don't have front mounted terminals or 5mm screws) If your vehicle's battery cables connect to the front of the battery, or uses 5mm screws, then you will need to use our battery terminal adapter. Connect the terminal adapter to the battery now. Make sure the Phillips screws are securely fastened (35in-lbs for 6mm screw, 45in-lbs for 8mm screw), but do not over-tighten.

4. Measure the length, width, and height of the original battery. In some cases, the ETX-Series Lithium battery will be smaller than the original. Use the foam spacers included to make the new battery the same or slightly bigger than the original. In some cases, multiple adhesives backed foam spacers will have to be stacked together. For our larger batteries, like the ETX24C use two stacks of foam on each end of the bottom of the battery to build up the height.

5. Place the battery in the vehicle and check that it is a snug fit.

6. Connect the positive (red) cable first. Make sure the Phillips screw is securely fastened (35in-lbs for 6mm screw, 45in-lbs for 8mm screw), but do not over-tighten. Next, connect the negative (black) cable. Do not connect the battery in reverse polarity (positive to negative or negative to positive).

7. Re-install the battery holder or strap and tighten securely. Re-secure all the wires and cables with zip-ties or other fasteners.

Be careful that the positive battery terminal does not or will not touch any metal parts of the vehicle.

Fault Monitoring Installation (ETX-Hundred Series)

The ETX-Hundred Series batteries have a discrete output that can be connected to many aircraft Electronic Flight Instrument System (EFIS) electronics or to a remote mounted LED. The diagrams below detail the required connections for both types of installations.

The ETX400-24-VNT's Test Input can be used to test the Fault output; connect the Test Input to battery positive (or aircraft bus), the fault output will indicate a fault state, and the LED is lit.

12 Volt Battery Fault Wire Connection

The ETX680(C), ETX900(series), ETX1200 have discrete output for external fault monitoring is a single wire with ¼" quick connect terminal. The ¼" quick connect terminal is an insulated "female"

type and should be compatible with most other manufacturers insulated male ¼" quick connect terminals.

24 Volt Battery Fault Wire Connection

The ETX680-24-VNT, ETX1200-24-VNT and ETX400-24-VNT have a 3-Pin connector (see the EarthX LED below). The negative of the LED connects to pin A of the battery's connector.

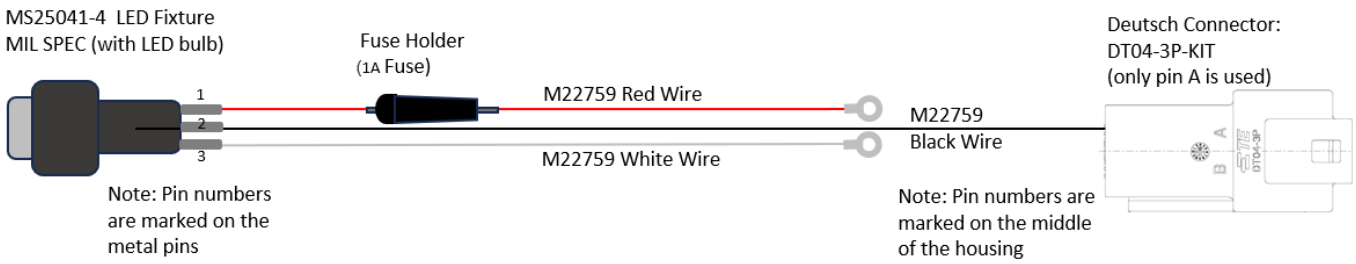

The **EarthX 24Volt LED Connector** is assembled as follows; crimp on the pin connector to the negative wire of the LED. Plug the wire/pin into the back of the housing, then push the wedge lock into place from the front. Then plug the 3-pin connector into the battery.

Behind the instrument panel, route the red wire (with inline fuse) to the instrument (or lights) circuit breaker (1 to 10 amp typical); crimp (supplied) #6 ring lug to wire and secure to breaker. Route the white wire to an adequate or available ground stud, crimp on (supplied) #6 ring lug and secure in place. Lastly, at the back of the LED crimp a .110" quick connect terminal onto the black, white and red wires. Then plug the red wire's quick connect onto pin 1 of the LED; the black wire's quick connect to pin 2 of the LED; and the white wire's quick connect onto pin 3 of the LED. Note: the LED's pin numbers are marked on the metal pins (hard to see).

EFIS Fault Wire Connection

The following two examples detail how to connect the fault monitoring output to an EFIS general purpose discrete input. The EFIS DC source negative must be referenced to the battery negative (this is the standard configuration).

Fault Monitoring Connection to Dynon Avionics EMS-D10, EMS-D120, Flight DEK-D180

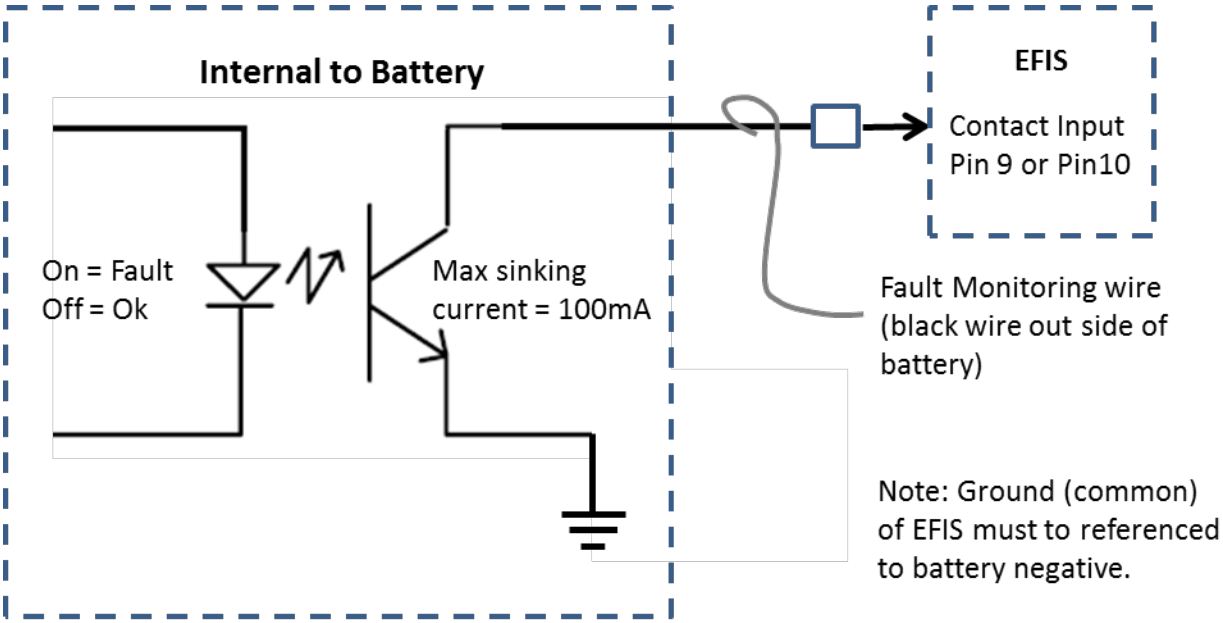

Fault Monitoring Connection to Dynon Avionics SkyView SV-EMS-220/221

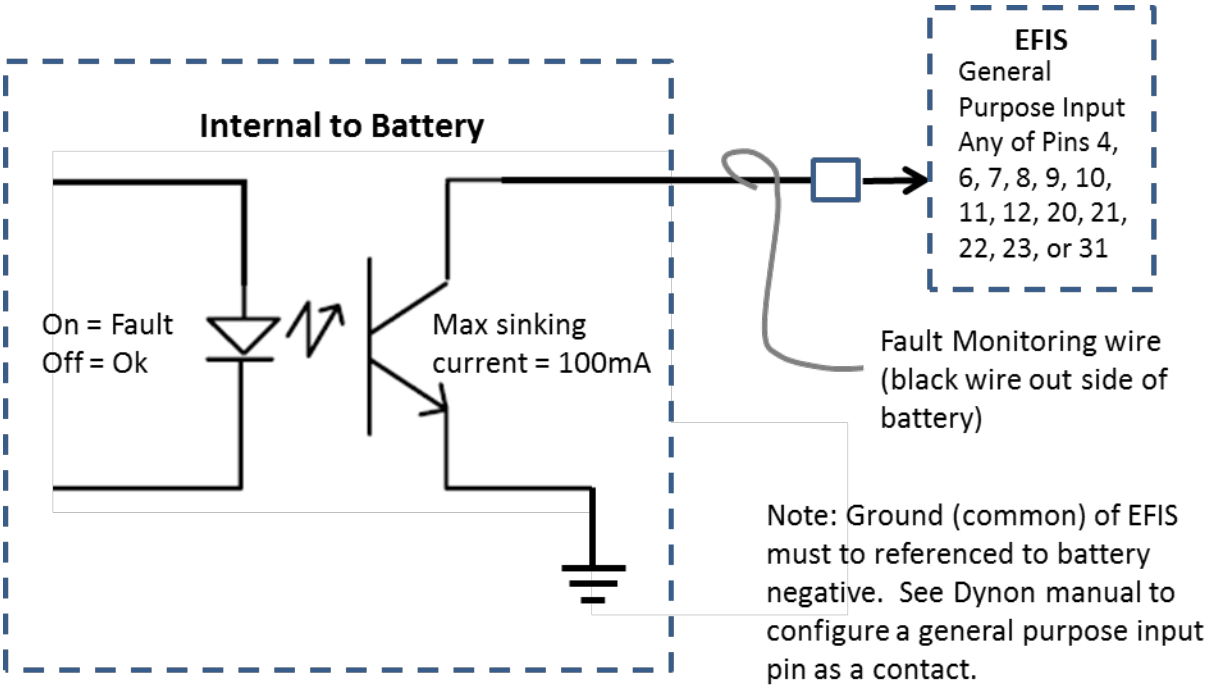

Configure the input as "active low", "alarm" type. Within SENSOR INPUT MAPPING, configure the

desired pin as a CONTACT input ALARM. Next, in SENSOR SETUP, set two ranges (no fault is 2.5-to-5 volt, fault is 0-to-2.5 volt). Lastly, put a widget on the EMS page using SCREEN LAYOUT EDITOR. Note; when Dynon power is off the LED inside battery may be dimly lit (less than 120uA, too small to drain the battery).

Fault Monitoring Connection to Garmin EFIS (G3X)

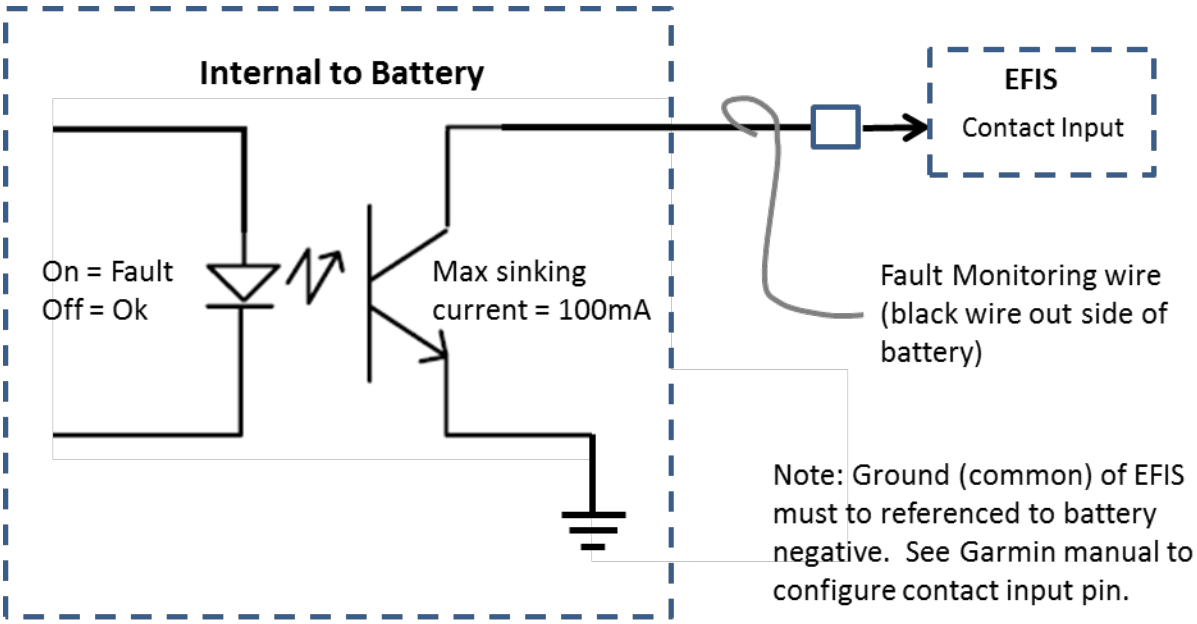

Configure the digital input 1-4 (pin 40-43) as "active low", "user defined alert" type.

Fault Monitoring Connection to Grand Rapids Technologies EFIS

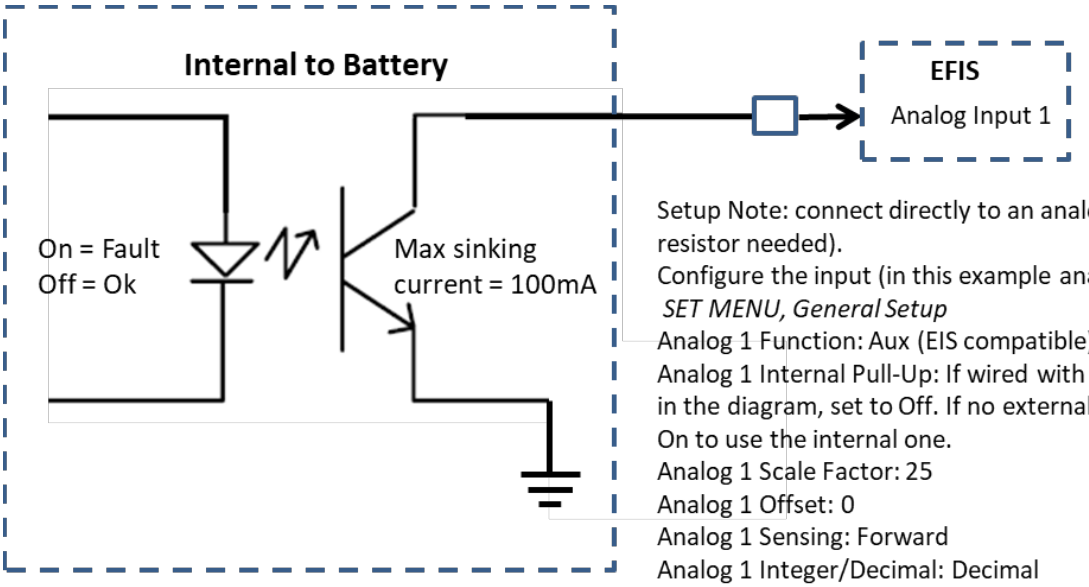

Setup Note: connect directly to an analog input (no external pull-up resistor needed).
Configure the input (in this example analog input 1) as an aux voltage:
SET MENU, General Setup
Analog 1 Function: Aux (EIS compatible)
Analog 1 Internal Pull-Up: If wired with an external pull-up (12v) like in the diagram, set to Off. If no external pull-up(12v) is used, set to On to use the internal one.
Analog 1 Scale Factor: 25
Analog 1 Offset: 0
Analog 1 Sensing: Forward
Analog 1 Integer/Decimal: Decimal
Analog 1 Aux Function: Aux
Analog 1 Aux Name: ETX Flt
The input will read the pull-up voltage when there's no fault, and it will read around zero when there is a battery fault.

To create an alarm, set analog input 1 minimum limit to 1.0V in SET MENU, Engine Limits Min, Analog 1 (ETX Flt): 1.0

The following example details how to connect the fault monitoring output to a remote LED. An incandescent bulb can NOT be used. The external fault monitoring wire is connected to battery ground (internally) if a fault is present. This output can be connected to an LED (12 volt LED to 12 voltage batteries, and 24 volt LED for 24 volt batteries). A 12V or 24V LED has a current limiting resistor already built into the bulb, so no additional external resistor is required. The positive wire (anode, typically the red wire) of the LED should be connected to an electrical bus fuse/breaker (.25A to 3A ok) downstream of the master switch, and the negative of the LED (cathode, typically the black wire) should be connected to the fault monitor wire (wire out the side of the battery) of the battery. It is recommended to connect the positive of the LED to a fuse/breaker downstream of the master switch. 20-22AWG MIL spec or similar wire is also recommended. **Note: use a 12V LED for 12V replacement battery, and a 24V LED for a 24V replacement battery.**

Fault Monitoring Connection to LED

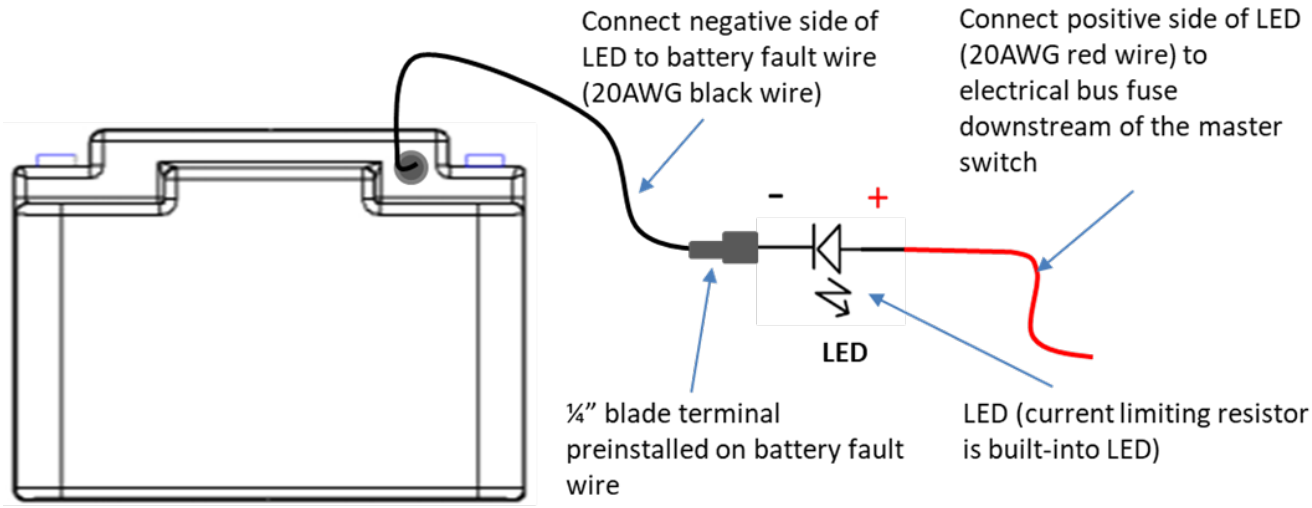

The ETX680-24-VNT and ETX1200-24-VNT have RS-232 Communications which can send battery volts, state of charge %, temperature and faults details to the aircraft's EFIS system (see the ETX680-24-TSO or ETX1200-24-TSO component manual for more information). Connect EFIS RS-232 receive to Pin B and RS-232 ground to Pin C. See the connection details below.

RS-232 Communications Connection (ETX1200-24-VNT only)

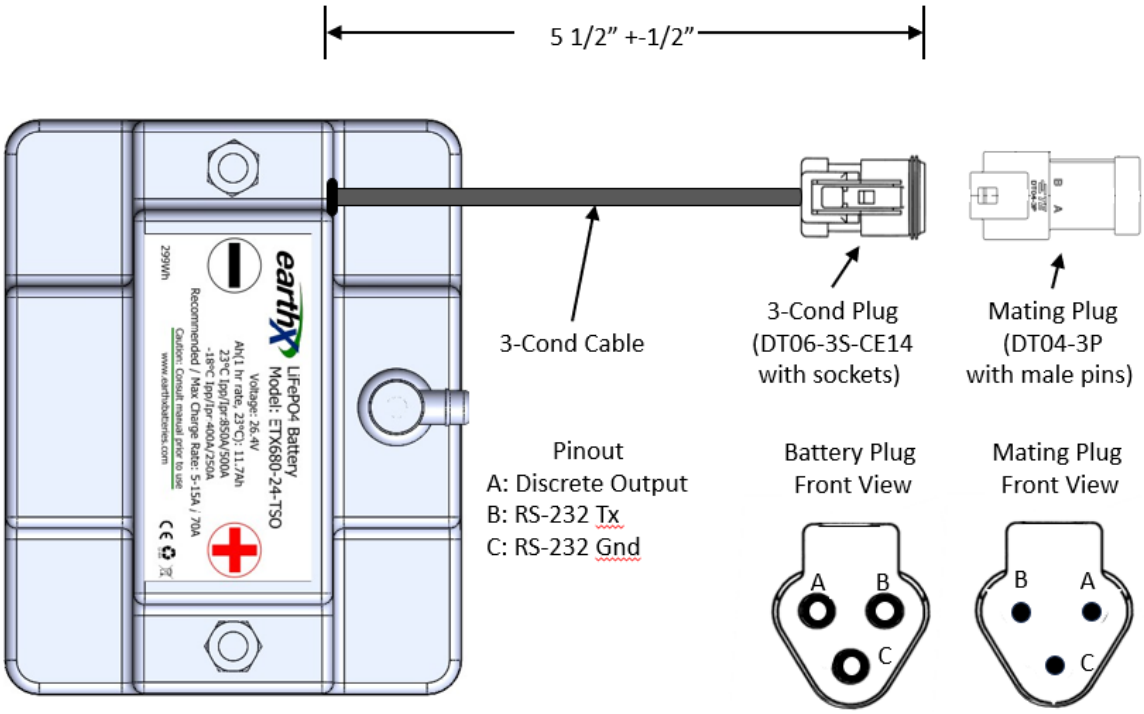

The ETX400-24-VNT, ETX680-24-VNT and ETX1200-24-VNT have a 3-Pin connector to provide the discrete fault output. Connect the remote LED's red wire (positive) to a spare or existing fuse or breaker off the electrical bus. Use any .25 Amp to 2 Amp fuse or breaker. Connect the LED's black wire (negative side of LED) to the battery's fault/status discrete output (Pin A of 3-Pin plug). See the figure above. Note: the ETX400-24-VNT does NOT have RS-232 communications.

Voltage Monitoring Alert Recommendation (Existing Aircraft Equipment if applicable)

The table below shows the recommended user alerts based on voltages when in flight. This pertains to existing equipment and is not applicable if existing low or high voltage alerts do not exist or are not adjustable.

The low charge level is very different from a lead acid battery, for a lithium battery is completely drained at approximately 11.5V, and the normal resting voltage is 13.3V.

Note: this table pertains to existing voltage level warning equipment and is NOT associated with the Fault monitoring LED.

Voltage	User Alert
>15V	High voltage warning
<13.5V	Alternator off-line alert
<12.6V	Low charge level warning

Vent Tubing Installation (Models with part # that end in VNT)

The vented models include a thermal run-away containment system making the design the same as the FAA certified TSO models which are fully compliant to the DO-311a specification, but these models are for experimental aircraft use. The containment system includes vent tubes designed to carry vapor or smoke to the exterior of the aircraft in the event of a thermal run-away condition. There are no emissions during normal operation. Both tubes exiting the battery are for outflow, and both are required. Follow the below guidelines for properly installing the vent tubes.

- Route the vent tubes to the outside of the aircraft or a compartment sealed-off from the passenger cabin that is vented to the outside. Be sure emitted gases will not be directed to cabin air intakes.
- Secure the vent tubes within 12" of the battery and within 12" of the aircraft exit.
- Be careful not to crush or restrict flow through the tubing.
- There should be a minimum of a 6" vertical section of tubing in between battery exits and aircraft exit.
- The minimum bend radius is 3"; tighter bends could cause the tubing to kink.
- Only EarthX approved or supplied tubing should be used. The tubing is chemical resistant and rated for 500°F (ETX900-VNT:1/4" ID, 5/16" OD Teflon tubing, ETX680-24-VNT/ETX1200-24-VNT: 3/8" ID 7/16" OD Teflon Tubing).

The supplied stainless-steel elbows allow the vent tubes to be routed to the left or right side of the battery with minimal headroom requirements (1" above the battery height). The tube stubs on the battery are cut to different lengths so the tubing can be routed one on top of the other. To install the supplied elbows, it is helpful to heat the tubing to a couple hundred degrees F before pressing them into the tubes. Be sure the entire barbed part of the elbow is completely inserted into the tubing. Other barbed fittings may be used if they do not restrict flow.

The two ¼" tubes of the ETX900-VNT may also be combined into a single tube with a minimum ID of 3/8". Fittings must be brass or stainless if installed within 2 feet from the battery (EarthX supplied kit parts ok). For fittings more than 2 feet from the battery they may be polyethylene or nylon. See figure below for tubing connections to the battery and clearances.

Installation of the battery in the cockpit is not recommended unless the battery is properly vented over-board, or unless all EarthX and aircraft safety (alternator over-voltage protection) precautions are followed (limitations, installation, operation, and inspections detailed in this manual).

Images below for ETX900-VNT and ETX400-24-VNT mounting and vent tubes.

Back View

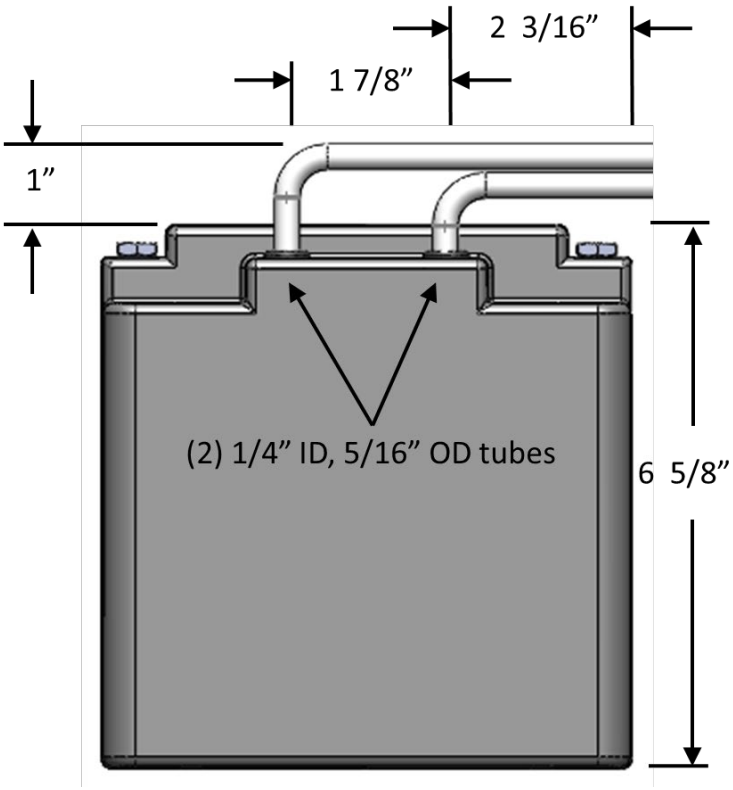

Top View

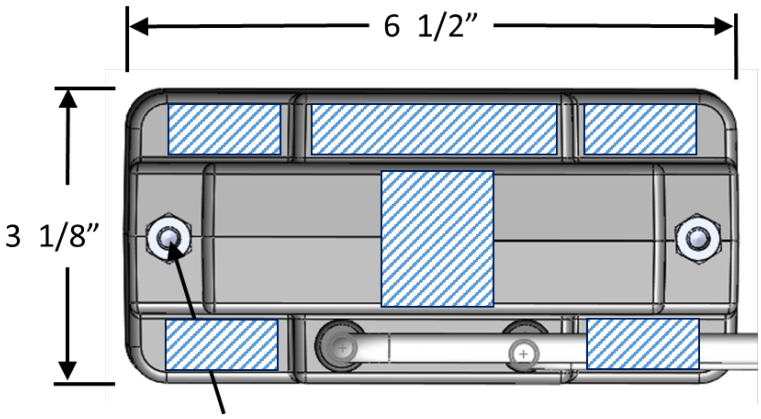

6mm Phillips Hex Head Screw

Acceptable battery hold down positions

Images below for ETX680-24-VNT Mounting and Vent Tubes

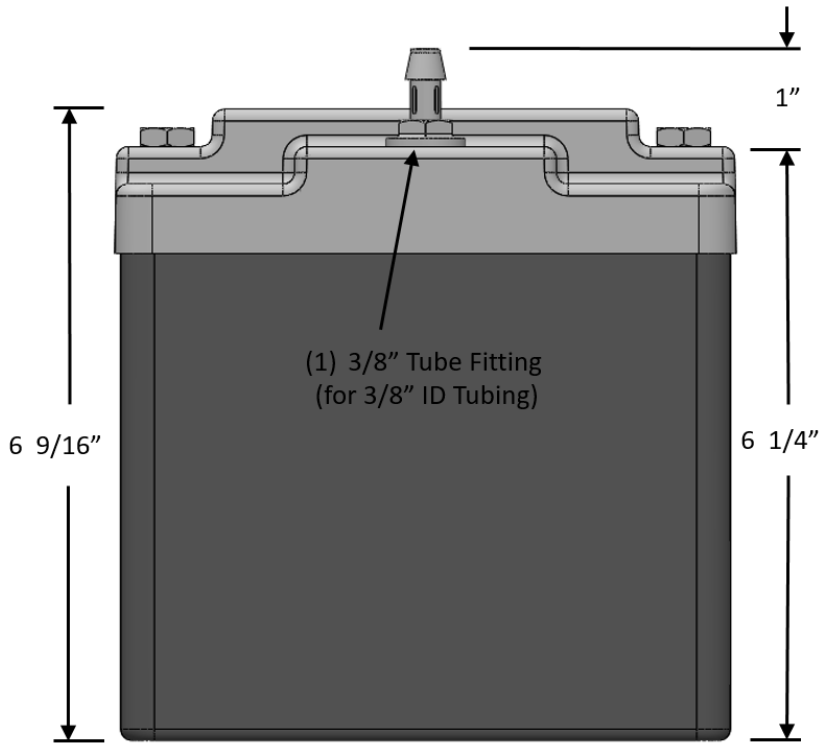

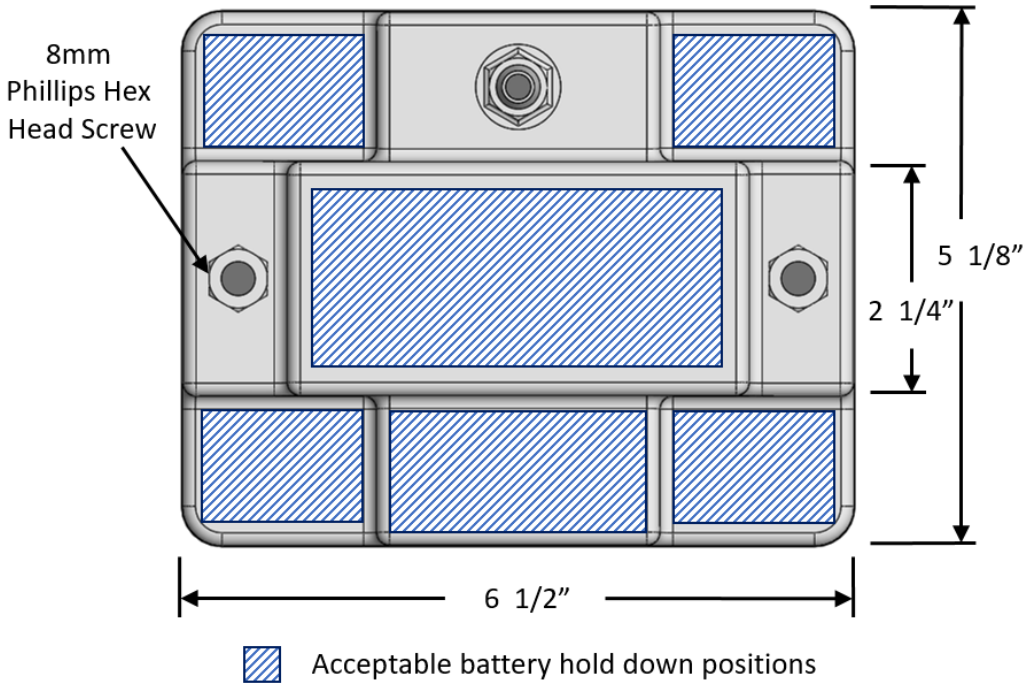

Images below for ETX1200-24-VNT Mounting and Vent Tubes

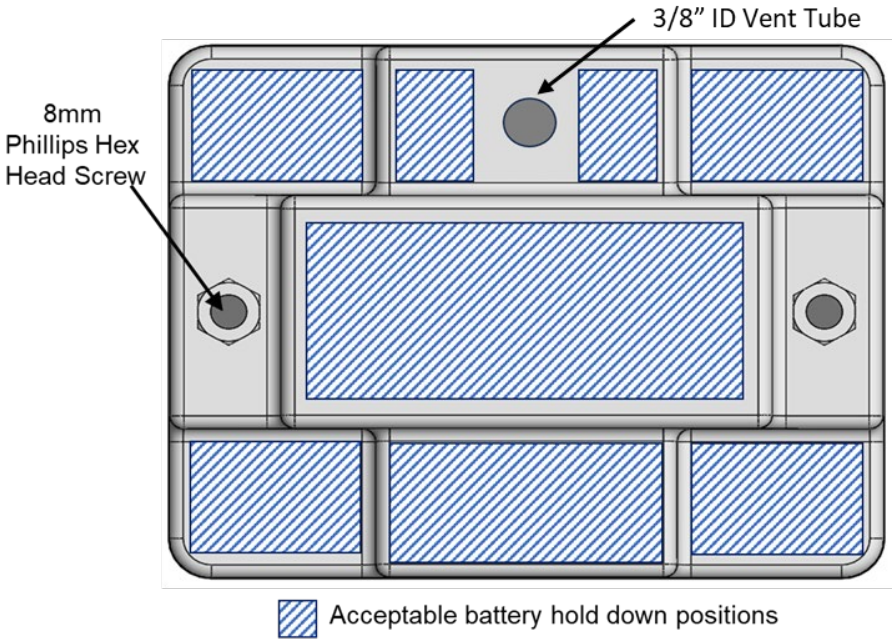

Back View

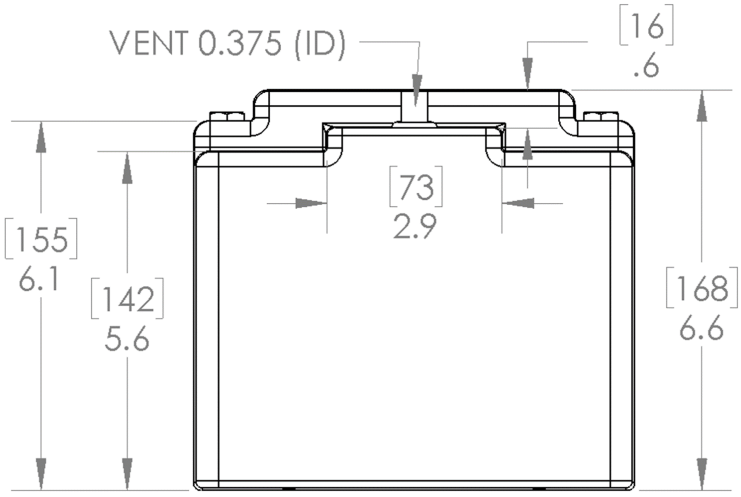

Top View

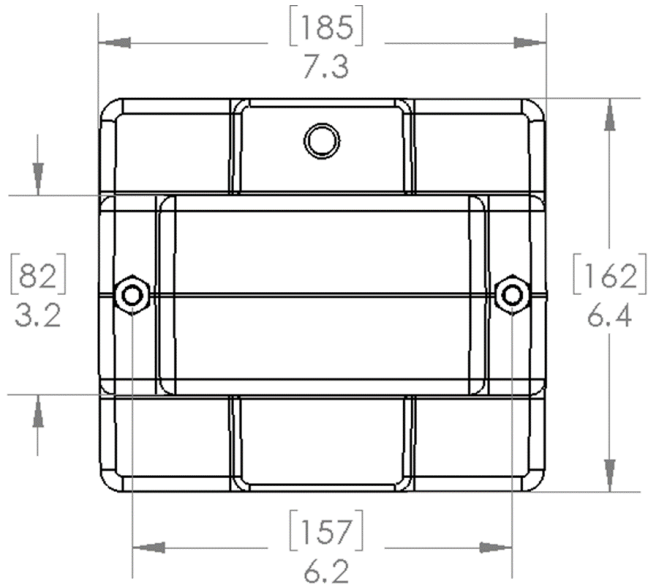

Battery Inspection and Testing

The ETX-Hundred Series battery is a maintenance free battery. Charging is only required as needed (see charging section in this manual). Inspection or testing is not needed for 24 months after purchase, and thereafter the following is recommended annually:

- Visually inspect the battery for signs of damage; plastic case is warped or swollen.
- Test the remote LED in the cockpit, touch the fault wire which connects to the battery to ground – the remote LED should come on.
- Ensure the terminal screws are tight (properly torqued)

For electrically dependent aircraft the following annual battery capacity test is recommended: To test the battery capacity (should be done at near room temperature, 23DegC):

a. Fully charge the battery with an appropriate charger
b. Turn on all electrical loads for flight operation and start a timer.
c. Measure and record the battery's discharge amps using a DC clamp-on current meter at the positive terminal of the battery.
d. Using the measured amps in the previous step and the battery's nameplate rated capacity (in Ah), calculate the time to discharge the battery to 80%.

$$\text{Time to discharge 80\% (Hours)} = \frac{Rated\ Capacity\ in\ Ah * .8}{Measured\ Discharge\ Amps}$$

For Example (16 Ah Rated Capacity, 5 amp measured discharge rate)

$$\text{Time to discharge 80\%} = \frac{16 * .8}{5} = 2.56 \text{ hours}$$

e. Terminate the test after the number of hours calculated in the previous step has expired or if the battery is over-discharged (shuts off discharge current). If the battery is still supplying power at the termination of the test, then the

battery's capacity is greater than 80%. If the battery's capacity is greater than 80% of it rated or capable of supporting the aircraft's emergency load for the required amount of time, then the battery has passed the test.

f. Fully charge the battery with an appropriate charger.

Charging

Failure to follow these instructions may result in damage to the battery!

If at any time the vehicle will not start, or the battery seems low, charge it for the recommended time and charge rates shown below and disconnect the charger when charging is complete. The recommended charge rates (from plug-in chargers) are detailed in the specification section above. The standard charge voltage from the vehicle is the peak output voltage (see specification section above). The maximum charge rate in the specification section is related to the vehicle charging system. Never exceed the maximum charging amps for your battery.

Lithium batteries have a low resistance to charge current, which is why they charge up so quickly. This is very different than a lead acid battery, which is naturally slow to charge. As such, users are often surprised by the very noticeable increase in charge current from their vehicle alternator. This is normal and expected and generally not a concern. The only concern is if the charge current exceeds the maximum charge rating of the battery. For example, a customer with a 60-amp alternator switches to our ETX680 (rated for a maximum of 60 charge amps) from a similar sized lead acid battery. Previously the peak charge amps with the lead acid battery were 25 amps. After installing the ETX680, the peak charge amps jumped to 54 amps. This is normal and as expected and within the charge current rating of the ETX680.

This table shows typical charging times for the different EarthX batteries:

Model	Charging Amps	Charging Time
ETZ5G	1 amp	3 hours
	2 amp	1.45 hours
	3 amp	1 hour
ETX12	1 amp	4 hours
	3 amp	1.5 hours
	5 amp	45 min.
ETX18/ETZ14C	1 amp	6 hours
	5 amp	1.2 hour
	8 amp	45 min.
ETX24	1 amp	8 hours
	5 amp	1.5 hour
	10 amp	45 min.

ETX36 ETX680 ETX680C	1 amp	12 hours
	5 amp	2.5 hour
	15 amp	45 min.
ETX900 ETX900-VNT	1 amp	16 hours
	5 amp	3 hours
	20 amp	45 min.
ETX48 ETX1200	1 amp	24 hours
	5 amp	5 hours
	30 amp	45 min.
ETX1600	1 amp	30 hours
	5 amp	7 hours
	30 amp	1 hour
ETX900-24 ETX680-24-VNT **(27.8 -29V charger)**	1 amp	16 hours
	5 amp	3 hours
	20 amp	45 min.
ETX1200-24-VNT **(27.8 -29V charger)**	5 amp	4 hours
	20 amp	1 hour
ETX400-24-VNT **(27.8 -29V charger)**	5 amp	2 hours

Lithium batteries have a very low self-discharge rate which means the battery, if disconnected from your vehicle, could "hold its charge" for a year. That said, modern vehicles like touring style motorcycles use power from the battery even with the key in the off position. In those cases, we recommend disconnecting a battery cable from the battery during long term storage (greater than 2 months) or using a charger.

The EarthX Lithium battery is compatible with most "modern" lead-acid battery chargers or 4 cell LiFePO4 battery chargers (8 cell for 24V replacement battery**)**. By "modern" lead acid charger we mean:

1. A smart lead-acid battery charger that is not older than 10 years old (as older chargers have crude voltage regulation)
2. Does not charge above 14.6V.
3. Will automatically turns off when the battery is fully charged (based on volts).
4. **Does not have a de-sulfate mode/deep conditioning mode/pulse mode** (these can all mean the same thing; it just depends on your charger manufacturer the terminology they choose). Do not use any charger with voltage that pulses above 15V! This will damage the battery. If in doubt, consult the manual that comes with your charger.

The "full charge" voltage for the EarthX Lithium battery is 13.9V or higher. Some lead-acid battery trickle charger's maintenance mode voltage can be below 13.3V, which is too low for a lithium battery.

IF YOUR BATTERY IS AT ZERO VOLTS:

EarthX lithium batteries have over discharge protection via an internal Battery Management System (BMS) to disconnect the battery from the active load (your vehicle) to protect the cells from damage when it is 95-98% drained. If you left your lights on, key on, have a faulty stator, or have a parasitic drain this can easily happen. When the battery is "disconnected", there is no voltage at the battery terminal. Note, some voltmeters may read a small voltage.

If you have an EarthX battery (2017 model year or newer), the over-discharge protection circuit will automatically reconnect when you remove "ALL" load from the battery (referred to as BMS Reset). You can remove all load by opening a battery disconnect switch (if used in your application, i.e. a master switch) or by removing the negative battery cable from the battery. After removing all load, measure the voltage if you have a voltmeter, if above 9.5 volt proceed to Option 1 below. If it is still near zero volts, then proceed to Option 2 below.

Option 1: Using a charger that is compatible with Lithium Iron Phosphate batteries, simply connect and charge.

Option2: If the battery was manufactured before 2017, or the voltage at the terminals is still near zero volts even with the battery cables removed or load removed, then you will need to use a lithium Optimate brand charger with a BMS Reset feature. If you do not have an Optimate charger, go to Option 3 below. Connect an Optimate charger to the battery first, then plug the charger into AC power (Optimate model TM-291), the "Save" LED on the charger should illuminate indicating the battery is charging. Other lithium Optimate chargers (model TM-275 or TM-281) have a "Reset" button, if so, press and hold the "Reset" button until the "Save" LED on the charger is illuminated also indicating the battery is charging. If the Optimate does not indicate it is charging, then contact EarthX Tech Support.

Option3: If you don't have an Optimate charger, remove battery cables from the battery, connect your charger, then connect either a jump starter, power supply (set at 13 volt) or another 12V battery in parallel with the EarthX battery so the charger will read the connected device's voltage. Once the charger sees a normal battery voltage (volts above 9 volts) it should engage and start charging. After 5-20 seconds you can remove the jump starter, power supply or jumper cables being careful not to disconnect the charger. The charger should continue to charge with the jump starter, power supply or jumper cables removed. If not, repeat the previous step (up to three times). Recharging this battery from the depleted state can take 1-24 hours. It is recommended that you DO NOT leave the battery unattended when charging from an over-discharged state.

Note, the values above are double for a 24V replacement battery.

Mixing of Batteries – Mixing of batteries of different part numbers or manufacturers, or age is not an acceptable practice. Batteries of different age or capacities in series connection is NOT allowed for it will result in battery(ies) being over-discharged or overcharged.

Never charge a faulty battery (a battery that will not accept a charge or hold a charge or a battery that is swollen in appearance).

Never use the de-sulfate setting on your charger. Be sure the charger's output voltage level does not exceed 15V. If the charger does not display the voltage reading, then use a voltmeter to check the voltage while charging.

If the battery gets hot while charging, discontinue charging and use.

Do not charge battery in temperatures above 140 degrees F (60C), or in direct sunlight.

When charging a battery, place it on a non-flammable surface, and remove any flammable items nearby.

For maximum battery and vehicle starting system life, do not crank an engine for more than 10 seconds within any 1 minute period.

Storage

If the vehicle is to be put in storage for an extended period of time, disconnect the battery cable to eliminate drain from the vehicle's electrical system. A fully charged battery can be put in storage for over a year without charging.

Our batteries can be stored at temperatures between -40°C to +70°C. Our batteries have no liquid inside and will not freeze.

Do not incinerate or expose to open flames!

Troubleshooting

The ETX-Series/ETZ-Series Lithium battery is an extremely reliable battery with a longer useful life than comparable lead-acid batteries.

Despite the high reliability, you may encounter situations where the battery does not operate as expected. Go to https://earthxbatteries.com/ and review the FAQ section for the most up to date comprehensive troubleshooting information.

Warranty

EarthX, Inc. (Manufacturer) warrants its ETX-Series lithium batteries (hereafter referred to as Battery or Batteries) and the EarthX Jump Pack to be free of defects in material and workmanship for a period of two years. EarthX, Inc. warrants the ETZ-Series lithium batteries to be free of defects in material and workmanship for a period of 1 year. A dealership is not authorized to issue a replacement battery without prior authorization from EarthX, Inc.

The applicable Warranty period begins from the date of purchase on the original receipt, or, if no receipt is available, from the manufacturing date on the battery. The warranty is nontransferable and for the original purchaser. Batteries determined to meet the conditions of this warranty will be replaced free of charge one time. Batteries for warranty replacement consideration must go to https://earthxbatteries.com/warranty/ and submit the online form. EarthX's acceptance of any items shipped to EarthX for warranty replacement shall not be deemed an admission that the item(s) are defective. For international warranty returns, the customer will pay the shipping expenses.

See our website at https://earthxbatteries.com/ for details.

Regulations

The ETX-Series Lithium battery, including the ETX-Hundred Series, are designed and tested to the following safety regulations as outlined in:

- FAA RTCA DO-311a (excluding the Thermal Runaway Containment Test), RTCA DO-160, DO-254
- CE — EU consumer safety, health and environmental regulations.
- UN 38.3

Only the ETX900-VNT, ETX680-24-VNT, ETX400-24-VNT and ETX1200-24-VNT battery meets the thermal containment requirements per DO-311a. These standards set the level of safety required for lithium batteries. The standard addresses normal and abnormal operating conditions.

Lithium batteries have special requirements for transportation (shipping) per UN 38.3 and Title (part) 49 of the Code of Federal Regulations or CFR's. Title 49 CFR Sections 100-185 of the U.S. Hazardous Materials Regulations (HMR).

Terminology

The following table describes the terminology used in this document.

Ah	Amp-Hour is a unit of measure of charge stored in a battery.
BMS	The Battery Management System refers to the collection of electronics responsible for monitoring and controlling the cell charge level, providing over charge protection and over discharge protection
Cell	A single encased electrochemical unit (one positive and one negative electrode) which exhibits a voltage differential across two terminals.
OEM	Original Equipment Manufacturer
IEC	International Electro technical Commission on safety standards.